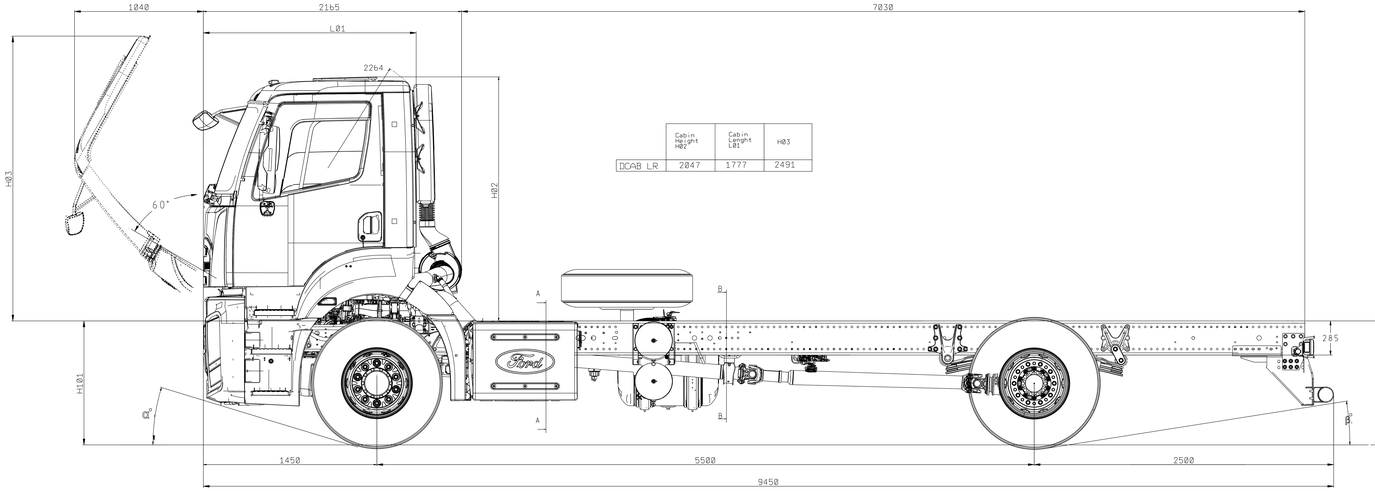

	Cabin Height H02*	Cabin Length L01	H03
DCAB LR	2047	1777	2491

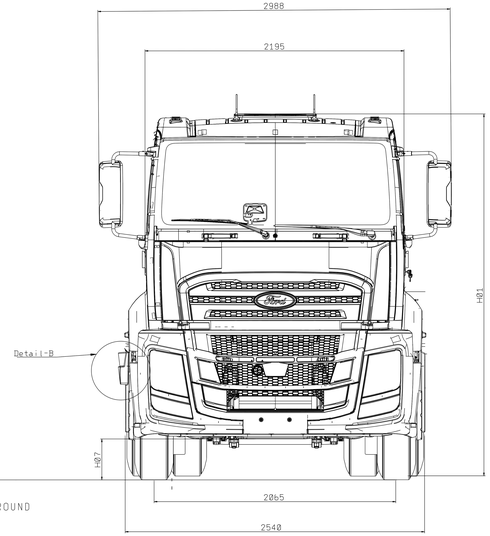

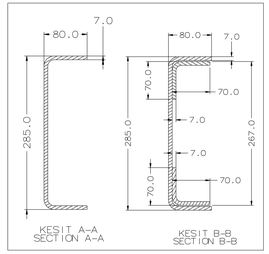

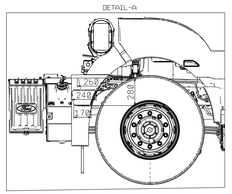

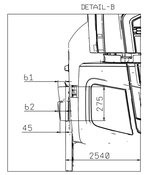

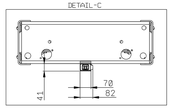

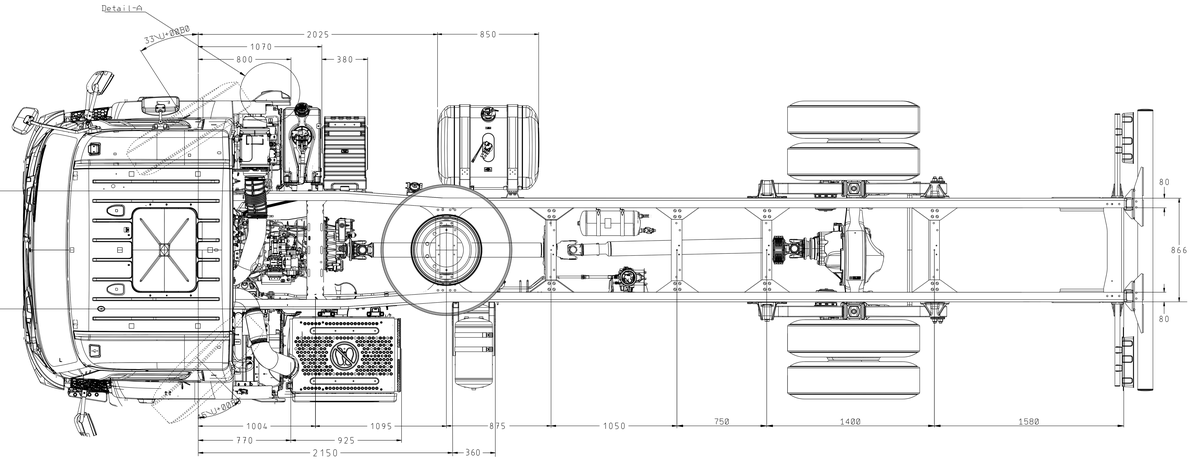

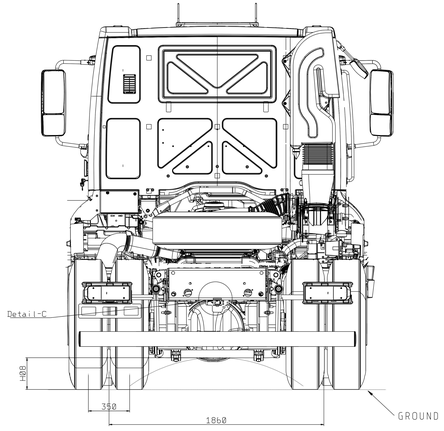

NOTE DO NOT TAKE A MEASUREMENT FROM DRAWING

FUEL TANK : 350LT
ALL TOLERANCE ±50mm
(FOR UNLADEN VEHICLE)

NOT: RESIM UZERINDEN OLCU ALMAYINIZ.

FUEL TANK : 350LT
TUM OLCULERDE TOLERANS ±50mm
(OLCULER YUKSUZ ARAC ICINDIR)

ALL MEASUREMENTS WERE GIVEN AS REFERENCE. ALL MEASUREMENTS SHOULD BE TAKEN FROM THE VEHICLE FOR ANY MODIFICATIONS AND/OR UPFIT CONSTRUCTION.

ARACA ILISKIN BIR ISLEM YAPILMASI GEREKEN DURUMLARDA , ISLEM YAPILACAK ARAC UZERINDE FIILI OLCUM VE INCELEME YAPILMALI.
TESPIT EDILEN OLCU VE DIGER OZELLIKLERE GORE ISLEM YAPILMALIDIR.

Tire Size		Front Chassis Height (unladen)	Rear Chassis Height (unladen)	Front Ground Clearance-Axle (laden)	Rear Ground Clearance-Axle (laden)	Vehicle Overall Height (Unladen)	Approach Angle	Departure Angle
Front	Rear	H101	H102	H07	H08	H01	α	β
315/60 R 22,5	315/60 R 22,5	1023	1069	242	175	3049…	12,4	10,20
315/70 R 22,5	315/70 R 22,5	1059	1075	274	206	3123	14	10,30
315/80 R 22,5	315/80 R 22,5	1072	1131	303	231	3148	15,18	11,8

REVISIONS			
ORIGINATOR	CHECKER	ENGR APP	MATL APP

PART AS RECEIVED AT THE FORD PLANT OR SERVICE PART PACKAGE/WAREHOUSE SHALL BE FREE OF ANY CORROSION PRODUCTS, OIL, GREASE, DIRT, DEBRIS, PRESERVATION FLUID, PACKAGING AND SHIPPING MATERIAL, COMBUSTION UNIFORMS OR FOREIGN MATERIALS DETRIMENTAL TO PROPER INSTALLATION OR INTENDED CLEANING METHOD.

CHANGES TO DESIGN, COMPOSITION OR PROCESSING OF THE PART PREVIOUSLY APPROVED FOR PRODUCTION REQUIRE PRIOR APPROVAL FROM FORD MOTOR COMPANY PRODUCT ENGINEERING. REFER TO ISSUES TAB&B

FOR CURRENT RELEASE STATUS, SEE THE WERS ENGINEERING NOTICE

FOR THE PURPOSES OF GEOMETRIC TOLERANCING, ALL DIMENSIONAL INFORMATION CONTAINED IN THE CAD MODEL IS BASIC (THEORETICAL)

REFERENCE	N/A
PART MUST COMPLY WITH RESTRICTED SUBSTANCE MANAGEMENT STANDARD WSS-M99P9999-A1 TO SAFEGUARD HEALTH, SAFETY AND THE ENVIRONMENT	
DRAFTED IN ACCORDANCE WITH FORD MOTOR COMPANY ENGINEERING CAD AND DRAFTING STANDARDS, VERSION 28.1	3RD ANGLE PROJ DIMENSIONS ARE IN MILLIMETERS
CAD TYPE / CAD LOC.	CAD FILE / DIM
K-CATIAS / IC	HL-VRC4b-000058-BLA-DLC-01r1 / IS MASTER
OPER. NO. / UNIT	DRAWING
N/A / N/A	HL-VRC4b-000058-BLA
DESIGN / DETAIL	TITLE / SHT 1
DOURMAZ2 / DOURMAZ2	1833_4x2_DC_5500WB MECH_SUSP_AALMO_Eb / OF 1
CHECKED / SAFETY	N/A
MUZUNGOR / MFG USE	
SCALE 1:10 / DATE 20230921	DIVISION N/A / PLANT INONU

FORD MOTOR COMPANY

PRINTED COPIES ARE UNCONTROLLED