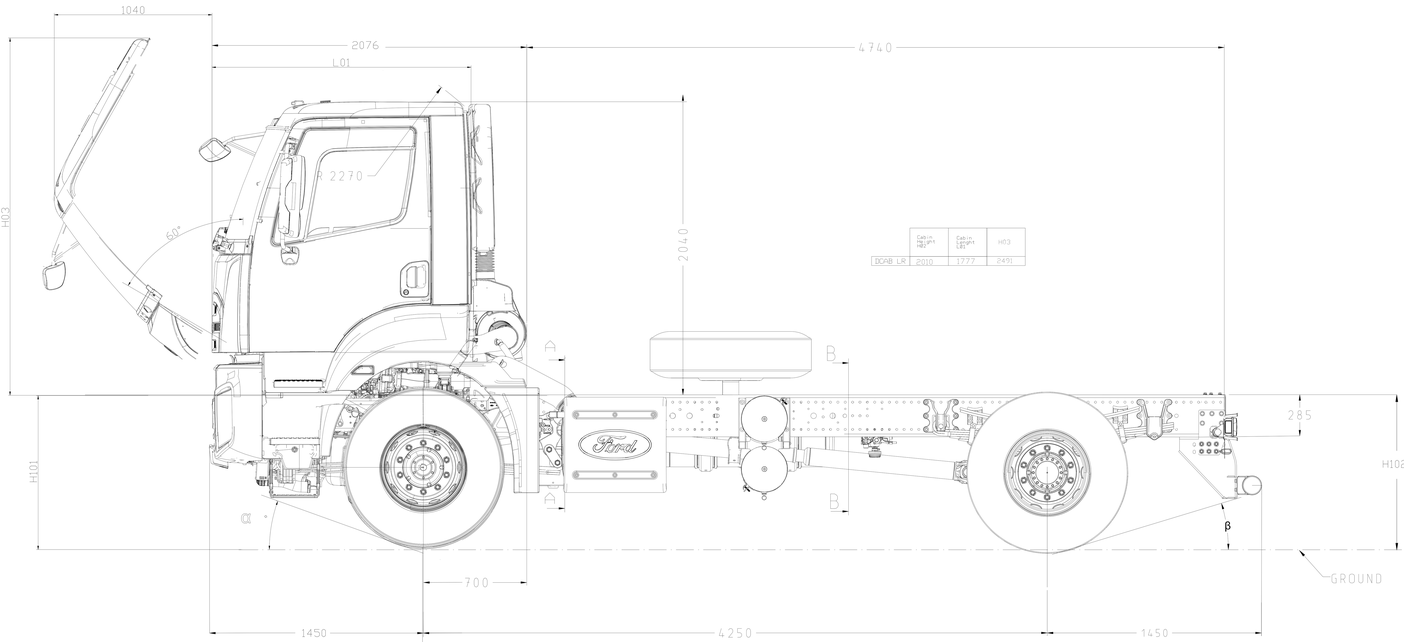

	Cabin Height (mm)	Cabin Height (mm)	H03
DCAB LR	2010	1777	2491

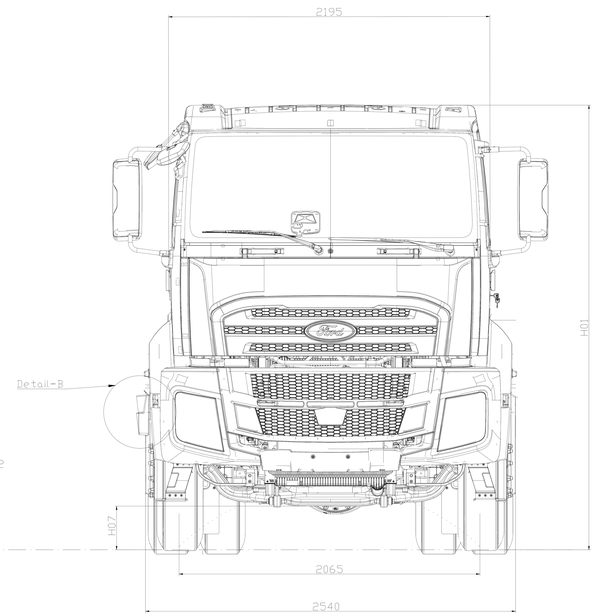

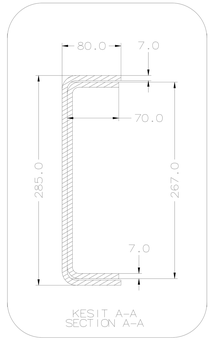

KESIT A-A
SECTION A-A

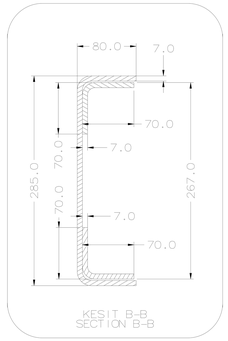

KESIT B-B
SECTION B-B

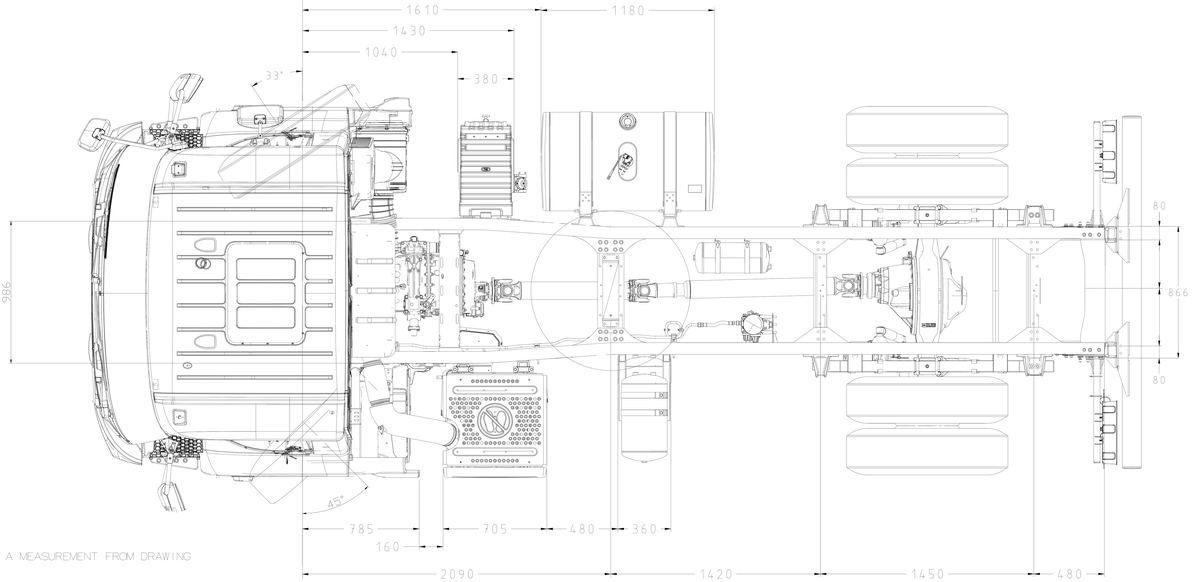

DETAIL-C

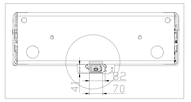

DETAIL-B

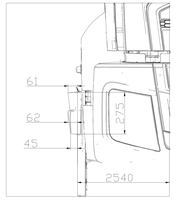

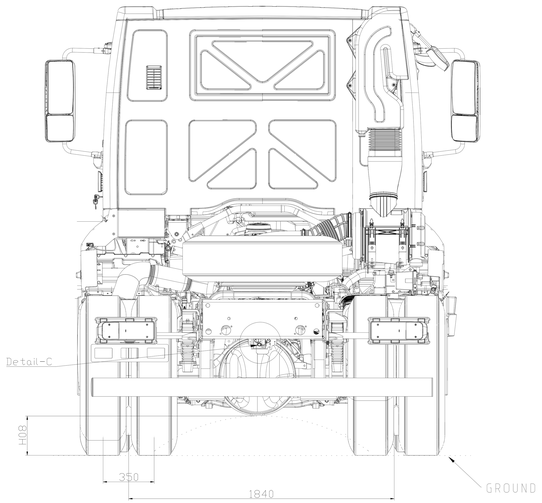

DETAIL-A

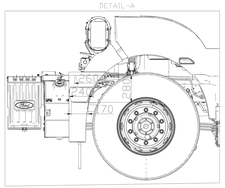

NOTE: DO NOT TAKE A MEASUREMENT FROM DRAWING

FUEL TANK: 315LT
ALL TOLERANCE ± 50mm
(FOR UNLADEN VEHICLE)

NOT: RESİM ÜZERİNDEN ÖLÇÜ ALMAYINIZ.

YAKIT TANKI: 315LT
TÜM ÖLÇÜLERDE TOLERANS ± 50mm
(ÖLÇÜLER YÜKSÜZ ARAÇ İÇİNDİR)

ALL MEASUREMENTS WERE GIVEN AS REFERENCE. ALL MEASUREMENTS SHOULD BE TAKEN FROM THE VEHICLE FOR ANY MODIFICATIONS AND/OR UPFIT CONSTRUCTION.

ARACA İLİŞKİN BİR İŞLEM YAPILMASI GEREKEN DURUMLARDA , İŞLEM YAPILACAK ARAC ÜZERİNDE FİİLİ ÖLCÜM VE İNCELEME YAPILMALI, TESPİT EDİLEN ÖLCÜ VE DİGER ÖZELLİKLERE GÖRE İŞLEM YAPILMALIDIR.

Tire Size		Front Chassis Height (unladen)	Rear Chassis Height (unladen)	Front Ground Clearance-Axle (laden)	Rear Ground Clearance-Axle (laden)	Vehicle Overall Height (Unladen)	Approach Angle	Departure Angle
Front	Rear	H101	H102	H07	H08	H01	α	β
315/80	315/80	1077	1154	248	240	3106	17,70	17,36

TRS	REVISIONS			
ORIGINATOR	CHECKER	ENGR APP	MATL APP	

REFERENCE N/A

PART MUST COMPLY WITH RESTRICTED SUBSTANCE MANAGEMENT STANDARD WSS-M99P9999-A1 TO SAFEGUARD HEALTH, SAFETY AND THE ENVIRONMENT.

DRAFTED IN ACCORDANCE WITH FORD MOTOR COMPANY ENGINEERING CAD AND DRAFTING STANDARDS VERSION 5

3RD ANGLE PROJ
DIMENSIONS ARE IN MILLIMETERS

CAD TYPE	CAD LOC	CAD FILE	DTMC
K-CATIAS	Tce	HL-VRC46-000058-DJ-DWG-01	IS MASTER
OPER. NO.	UNIT	DRAWING	
N/A	N/A	HL-VRC46-000058-DJA	
DESIGN	DETAIL	TITLE	SHT 1
FKARADAI	FKARADAI	18330_4250WB	OF 1
CHECKED	SAFETY	MECH_SUSP_LT E3	N/A
VKILANC	MFG USE		
SCALE	DATE	DIVISION N/A	
1:1	20231101	PLANT ESKISEHIR	

FORD MOTOR COMPANY

PRINTED COPIES ARE UNCONTROLLED