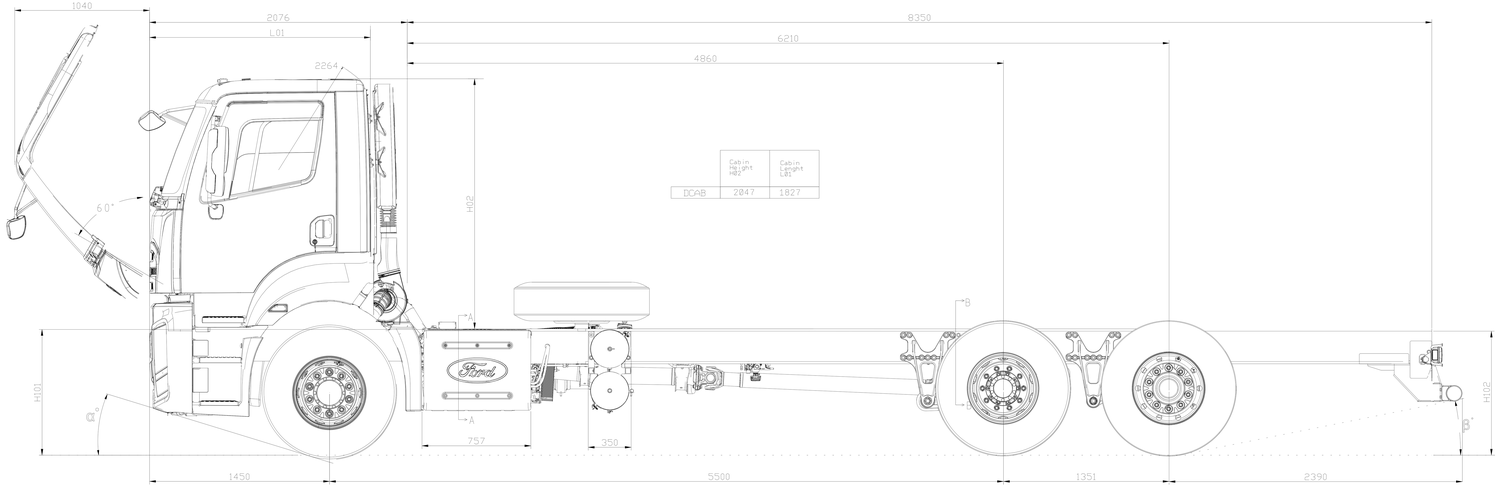

	Cabin Height H02	Cabin Lenght L01
DCAB	2047	1827

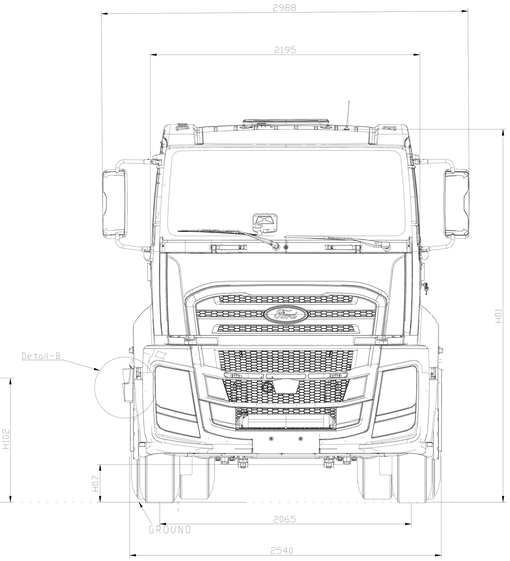

A-A SECTION
SCALE 1/2

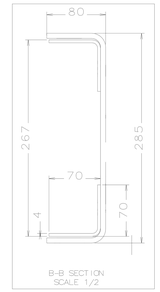

B-B SECTION
SCALE 1/2

DETAIL-A

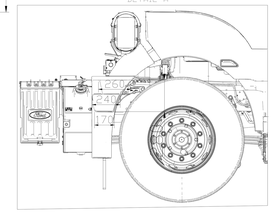

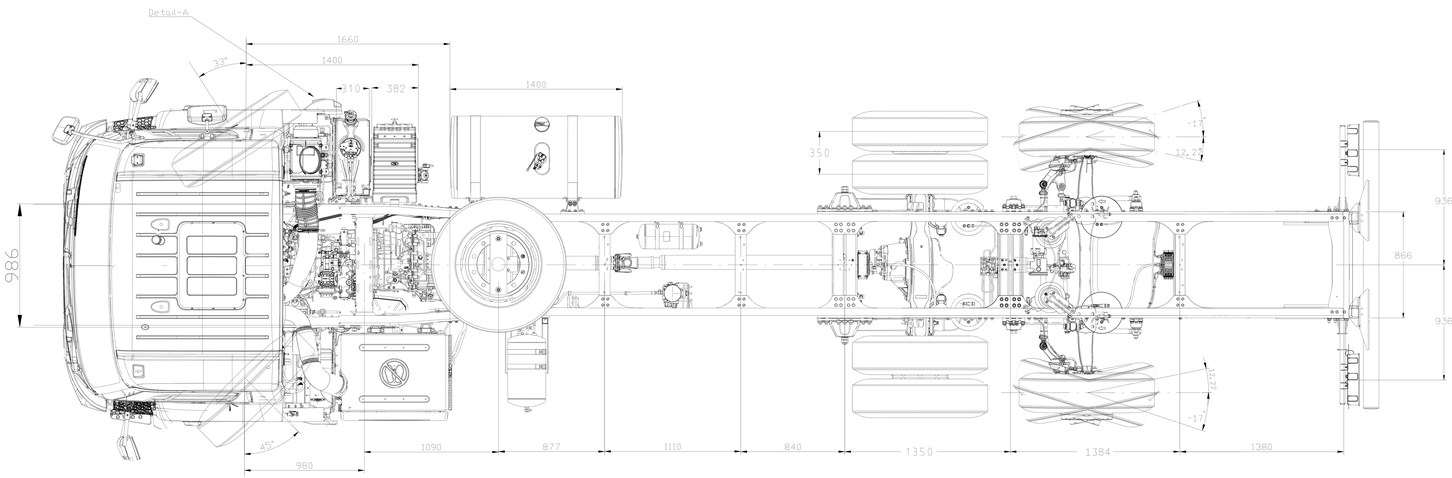

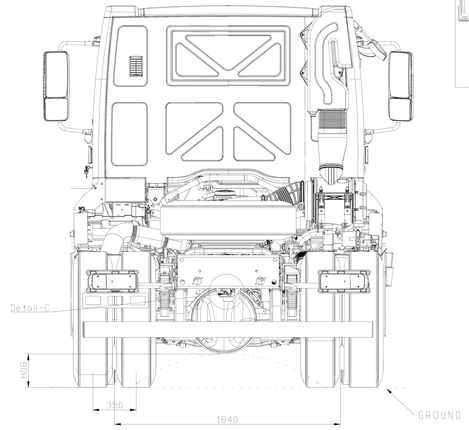

DETAIL-B

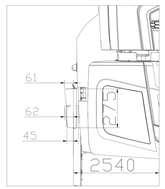

DETAIL-C

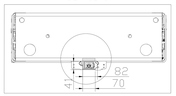

NOTE DO NOT TAKE A MEASUREMENT FROM DRAWING

FUEL TANK : 600 LT
ALL TOLERANCE ±50mm
(FOR UNLADEN VEHICLE)

NOT: RESIM UZERINDEN OLCU ALMAYINIZ.

FUEL TANK : 600 LT
TUM OLCULERDE TOLERANS ±50mm
(OLCULER YUKSUZ ARAC ICINDIR)

ALL MEASUREMENTS WERE GIVEN AS REFERENCE. ALL MEASUREMENTS SHOULD BE TAKEN FROM THE VEHICLE FOR ANY MODIFICATIONS AND/OR UPFIT CONTRUCTION.

ARACA ILISKIN BIR ISLEM YAPILMASI GEREKEN DURUMLARDA , ISLEM YAPILACAK ARAC UZERINDE FIILI OLCUM VE INCELEME YAPILMALI.
TESPIT EDILEN OLCU VE DIGER OZELLIKLERE GORE ISLEM YAPILMALIDIR.

Tire Size		Front Chassis Height (unladen)	Rear Chassis Height (unladen)	Front Ground Clearance-Axle (laden)	Rear Ground Clearance-Axle (laden)	Vehicle Overall Height (Unladen)	Approach Angle	Departure Angle
Front	Rear	H101	H102	H07	H08	H01	α	β
315/60	315/60	1017	961	247	176	3081	13,88	8,82
315/70	315/70	1046	992	273	202	3110	14,34	8,48

REFERENCE	N/A		
PART MUST COMPLY WITH RESTRICTED SUBSTANCE MANAGEMENT STANDARD WSS-M99P9999-A1 TO SAFEGUARD HEALTH, SAFETY AND THE ENVIRONMENT			
DRAFTED IN ACCORDANCE WITH FORD MOTOR COMPANY ENGINEERING CAD AND DRAFTING STANDARDS VERSION 28.0	3RD ANGLE PROJ. DIMENSIONS ARE IN MILLIMETERS		
CAD TYPE: K-CATIAS	CAD LOC.: TC	CAD FILE: HL-VRC46-00005B-EJ-DWG-01	DTMC / IS MASTER
OPER. NO.: N/A	UNIT: N/A	DRAWING: HL-VRC46-00005B-EJA	
DESIGN: FKARADAI	DETAIL: FKARADAI	TITLE: 26XX 6X2 RSA DC LR E5 C6R5_MF_LRT_05000JB AALLQ	SHT 1 OF 1
CHECKED: FKARADAI	SAFETY: FKARADAI		N/A
	MFG. USE		
SCALE: 1:12	DATE: 2021/10/04	DIVISION: N/A	
		PLANT:	
		FORD MOTOR COMPANY	

LTRS	REVISIONS			
ORIGINATOR	CHECKER	ENGR APP	MATL APP	

PART AS RECEIVED AT THE FORD PLANT OR SERVICE PART PACKAGE/WAREHOUSE SHALL BE FREE OF ANY CORROSION ALIGNED WITH THE FORD CUSTOMER SERVICE DIVISION (FCSD) PACKAGING AND SHIPPING GUIDE. CORROSION INHIBITORS OR FOREIGN MATERIALS DETRIMENTAL TO THE INSTALLATION OR FUNCTION OF THE PART MUST BE REMOVABLE BY THE INTENDED CLEANING METHOD

CHANGES TO DESIGN, COMPOSITION OR PROCESSING OF THE PART PREVIOUSLY APPROVED FOR PRODUCTION REQUIRE PRIOR APPROVAL FROM FORD MOTOR COMPANY PRODUCT ENGINEERING. REFER TO ISO/TS 16949

FOR CURRENT RELEASE STATUS, SEE THE WERS ENGINEERING NOTICES

FOR THE PURPOSES OF GEOMETRIC TOLERANCING, ALL DIMENSIONAL INFORMATION CONTAINED IN THE CAD MODEL IS BASIC (THEORETICAL)

PRINTED COPIES ARE UNCONTROLLED