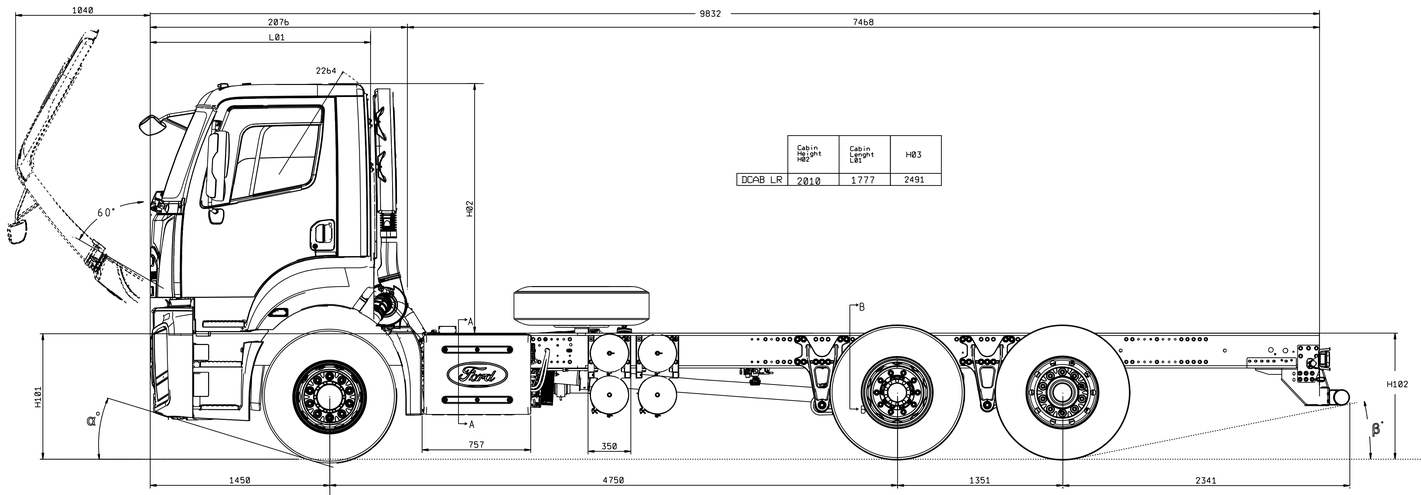

	Cabin Height H02	Cabin Lenght L01	H03
DCAB LR	2010	1777	2491

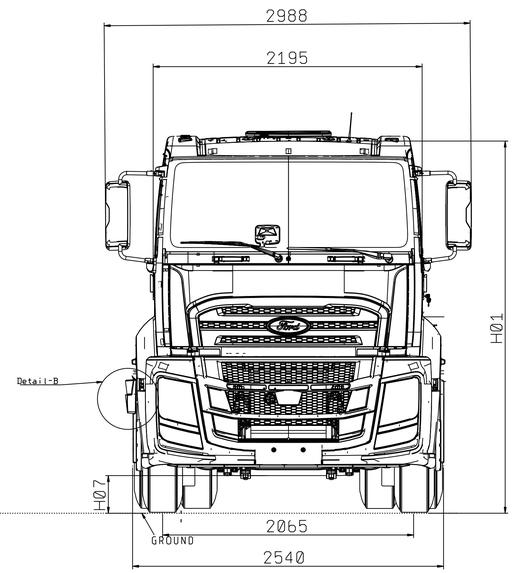

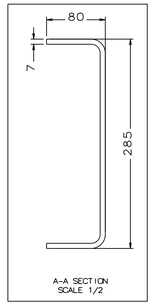

A-A SECTION
SCALE 1/2

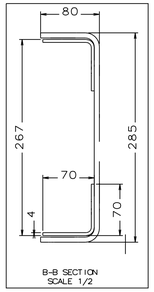

B-B SECTION
SCALE 1/2

DETAIL-A

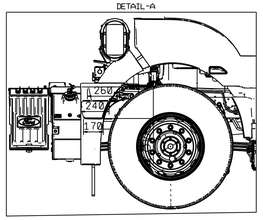

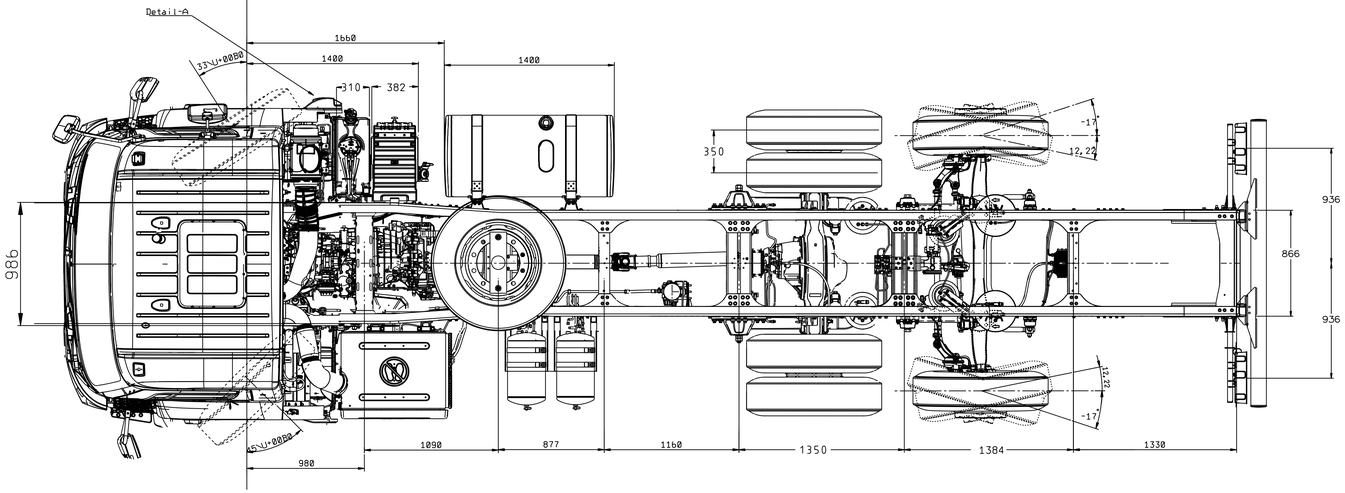

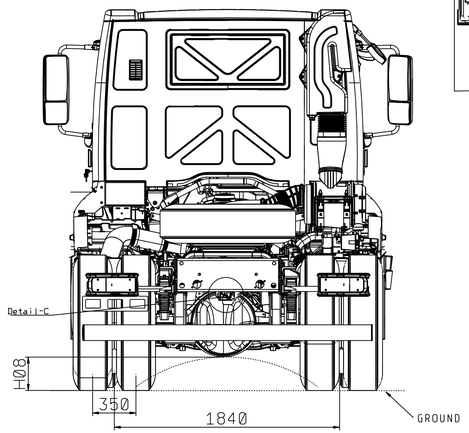

DETAIL-B

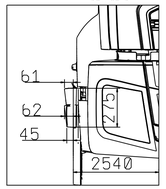

DETAIL-C

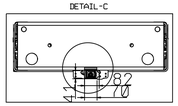

NOTE DO NOT TAKE A MEASUREMENT FROM DRAWING

FUEL TANK : 400 LT
ALL TOLERANCE ±50mm
(FOR UNLADEN VEHICLE)

NOT: RESIM UZERINDEN OLCU ALMAYINIZ.

FUEL TANK : 400 LT
TUM OLCULERDE TOLERANS ±50mm
(OLCULER YUKSUZ ARAC ICINDIR)

ALL MEASUREMENTS WERE GIVEN AS REFERENCE. ALL MEASUREMENTS SHOULD BE TAKEN FROM THE VEHICLE FOR ANY MODIFICATIONS AND/OR UPFIT CONTRUCTION.

ARACA ILISKIN BIR ISLEM YAPILMASI GEREKEN DURUMLARDA ,ISLEM YAPILACAK ARAC UZERINDE FIILI OLCUM VE INCELEME YAPILMALI, TESPIT EDILEN OLCU VE DIGER OZELLIKLERE GORE ISLEM YAPILMALIDIR.

Tire Size		Front Chassis Height (unladen)	Rear Chassis Height (unladen)	Front Ground Clearance-Axle (laden)	Rear Ground Clearance-Axle (laden)	Vehicle Overall Height (Unloden)	Approach Angle	Departure Angle
Front	Rear	H101	H102	H07	H08	H01	α	β
315-60 R22,5	315-60 R22,5	987	905	243	191	3814	10,45	9,61
315-70 R22,5	315-70 R22,5	1010	1015	272	218	3845	11,86	10,55
315-80 R22,5	315-80 R22,5	1050	1043	299	247	3877	13,26	11,33

LTRS	REVISIONS		
ORIGINATOR	CHECKER	ENGR APP	MATL APP

PART AS RECEIVED AT THE FORD PLANT OR SERVICE PART PACKAGER/WAREHOUSE SHALL BE FREE OF ANY CORROSION ALIGNED WITH THE FORD CUSTOMER SERVICE DIVISION (FCSD) PACKAGING AND SHIPPING GUIDE. CORROSION INHIBITORS OR FOREIGN MATERIALS DETRIMENTAL TO THE INSTALLATION OR FUNCTION OF THE PART MUST BE REMOVABLE BY THE INTENDED CLEANING METHOD

CHANGES TO DESIGN, COMPOSITION OR PROCESSING OF THE PART PREVIOUSLY APPROVED FOR PRODUCTION REQUIRE PRIOR APPROVAL FROM FORD MOTOR COMPANY PRODUCT ENGINEERING. REFER TO ISO/TS 16949

FOR CURRENT RELEASE STATUS, SEE THE WERS ENGINEERING NOTICE

FOR THE PURPOSES OF GEOMETRIC TOLERANCING, ALL DIMENSIONAL INFORMATION CONTAINED IN THE CAD MODEL IS BASIC (THEORETICAL)

REFERENCE	N/A
PART MUST COMPLY WITH RESTRICTED SUBSTANCE MANAGEMENT STANDARD WSS-M99P9999-A1 TO SAFEGUARD HEALTH, SAFETY AND THE ENVIRONMENT.	
DRAFTED IN ACCORDANCE WITH FORD MOTOR COMPANY ENGINEERING CAD AND DRAFTING STANDARDS VERSION 28.1	3RD ANGLE PROJ DIMENSIONS ARE IN MILLIMETERS
CAD TYPE: CATIA	CAD LOC.: TC
CAD FILE: HL-VRC46-000058-DV-DWG-01	DMC
DRAWING: HL-VRC46-000058-ENA	IS MASTER
OPER. NO.: N/A	UNIT: N/A
DESIGN: FKARAKAS	DETAIL: FKARAKAS
TITLE: 2bXX_bX2_RSA_DC_LR_Eb CbAS_MT_LRT_4750WB	SHT 1 OF 1
CHECKED: FKARAKAS	SAFETY: HFG USE
	N/A
SCALE: 1:12	DATE: 20231108
DIVISION: N/A	
PLANT	

FORD MOTOR COMPANY

PRINTED COPIES ARE UNCONTROLLED