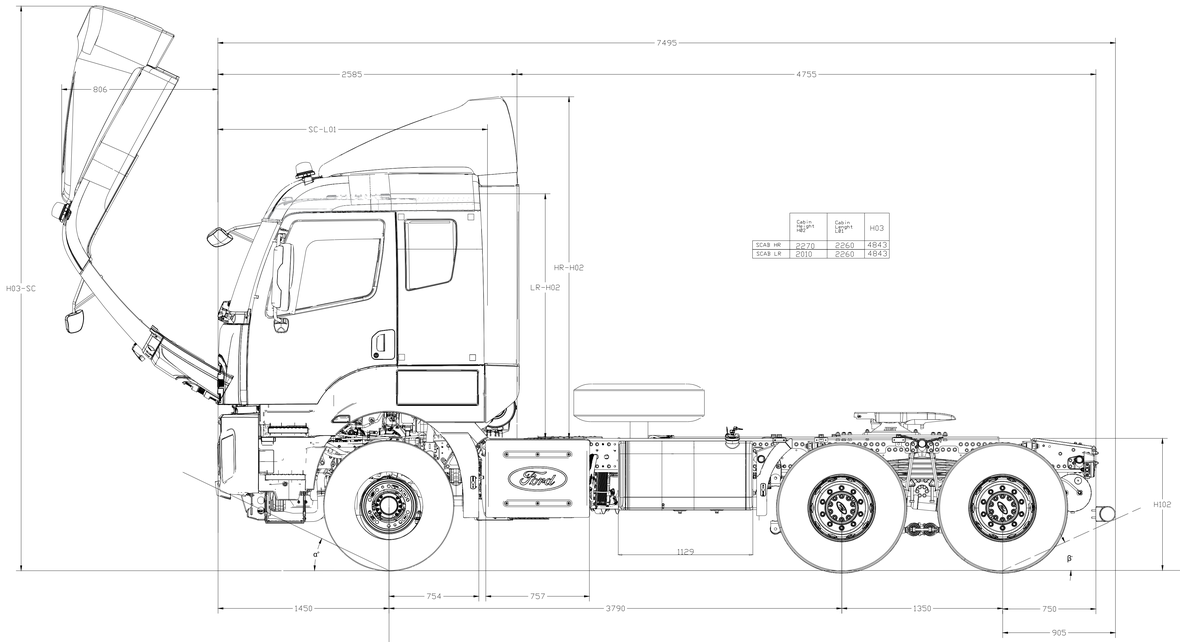

	Cabin Height H02	Cabin Length H1	H03
SCAB HR	2270	2260	4843
SCAB LR	2010	2260	4843

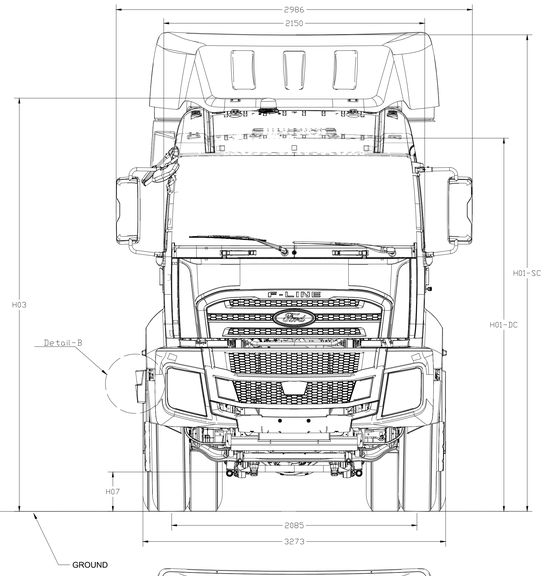

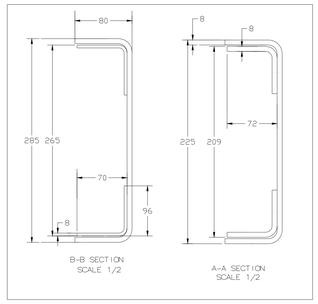

DETAIL-A

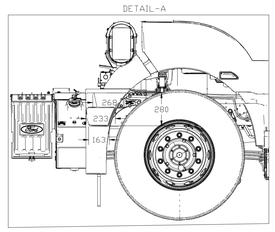

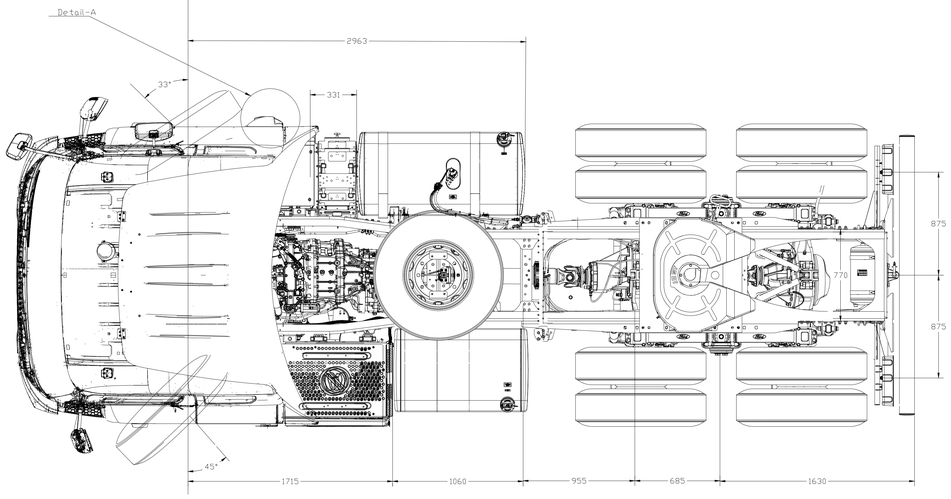

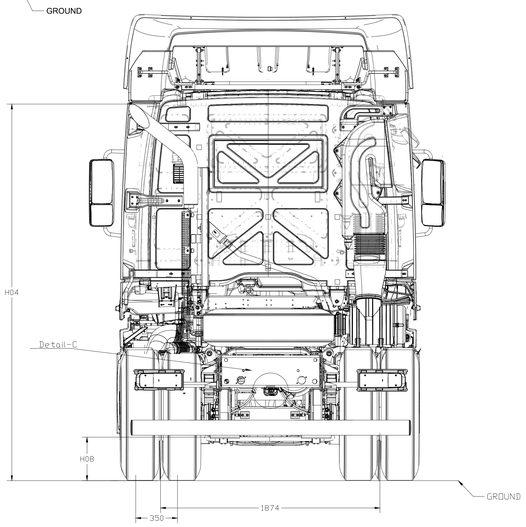

DETAIL-B

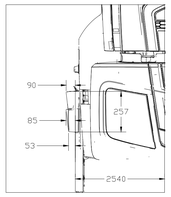

DETAIL-C

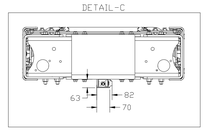

NOTE DO NOT TAKE A MEASUREMENT FROM DRAWING
FUEL TANK : 400L+280LT
DIMENSIONAL VARİATIONS POSSIBLE FOR PHYSICAL VEHICLE
ALL TOLERANCE +/- 50mm
(FOR UNLADEN VEHICLE)

NOT : RESIM UZERINDEN OLCU ALMAYINIZ
YAKIT TANKI HACMI: 400L+280LT
FIZIKSEL ARACTA OLCU FARKLILIKLARI OLABILIR.

TUM ölÇULERDE TOLERANS +/- 50mm
(ölÇULER YUKSUZ ARAÇ IÇINDIR)

ALL MEASUREMENTS WERE GIVEN AS REFERENCE. ALL MEASUREMENTS SHOULD BE TAKEN FROM THE VEHICLE FOR ANY MODIFICATIONS AND/OR UPFIT CONTRUCTION.
ARACA ILISKIN BIR ISLEM YAPILMASI GEREKEN DURUMLARDA , ISLEM YAPILACAK ARAC UZERINDE FIILI OLCUM VE INCELEME YAPILMALI, TESPIT EDILEN OLCU VE DIGER OZELLIKLERE GORE ISLEM YAPILMALIDIR.

Tire Size		Front Chassis Height (unladen)	Rear Chassis Height (unladen)	Front Ground Clearance-Axle (laden)	Rear Ground Clearance-Axle (laden)	Vehicle Overall Height (Unladen)	Approach Angle	Departure Angle	Vehicle Overall Height (Unladen) (GCC Lamp)	Vehicle Overall Height (Unladen) (Vertival Exhaust)
Front	Rear	H101	H102	H07	H08	LR-H01/HR-H01	α	β	LR-H03/ HR-H03	H04
315/80 R22.5	315/80 R22.5	1133	1145	382	305	3354/3868	20.1°	14.4°	3250/3470	3248
325/95 R24	325/95 R24									

REVISIONS				
LTRS	ORIGINATOR	CHECKER	ENGR APP	MATL APP

PART AS RECEIVED AT THE FORD PLANT OR SERVICE PART PACKAGE(WAREHOUSE) SHALL BE PRESERVED AND PROTECTED ALIGNED WITH THE FORD CUSTOMER SERVICE DIVISION (FCSD) PACKAGING AND SHIPPING GUIDE. CORROSION INHIBITORS OR FOREIGN MATERIALS DETRIMENTAL TO THE INSTALLATION OR FUNCTION OF THE PART MUST BE REMOVABLE BY THE INTENDED CLEANING METHOD

CHANGES TO DESIGN, COMPOSITION OR PROCESSING OF THE PART PREVIOUSLY APPROVED FOR PRODUCTION REQUIRE PRIOR APPROVAL FROM FORD MOTOR COMPANY PRODUCT ENGINEERING. REFER TO ISO/TS 16949

FOR CURRENT RELEASE STATUS, SEE THE WERS ENGINEERING NOTICE

FOR THE PURPOSES OF GEOMETRIC TOLERANCING, ALL DIMENSIONAL INFORMATION CONTAINED IN THE CAD MODEL IS BASIC (THEORETICAL)

REFERENCE	N/A
PART MUST COMPLY WITH RESTRICTED SUBSTANCE MANAGEMENT STANDARD WSS-M99P9999-A1 TO SAFEGUARD HEALTH, SAFETY AND THE ENVIRONMENT	
DRAFTED IN ACCORDANCE WITH FORD MOTOR COMPANY ENGINEERING CAD AND DRAFTING STANDARDS VERSION 28.1	3RD ANGLE PROJ. DIMENSIONS ARE IN MILLIMETERS
CAD TYPE: C-CATIA5	CAD LOC.: IC
CAD FILE: HL-RC46-50000-FU-DWG-01	DIMC / IS MASTER
OPER. NO.: N/A	UNIT: N/A
DRAWING: HL-RC46-50000-FU-DWG-01	
DESIGN: FERTAN	DETAIL: OZBALCI
TITLE: 3548_6X4_SC_LR/HR_EU5_LWC _MS_TRACTOR_3800WB	SHT 1 OF 1
CHECKED: MHURRIYET	SAFETY MFG USE: N/A
SCALE: 1:12	DATE: 20231110
DIVISION: N/A	
PLANT: INONU	
FORD MOTOR COMPANY	

PRINTED COPIES ARE UNCONTROLLED