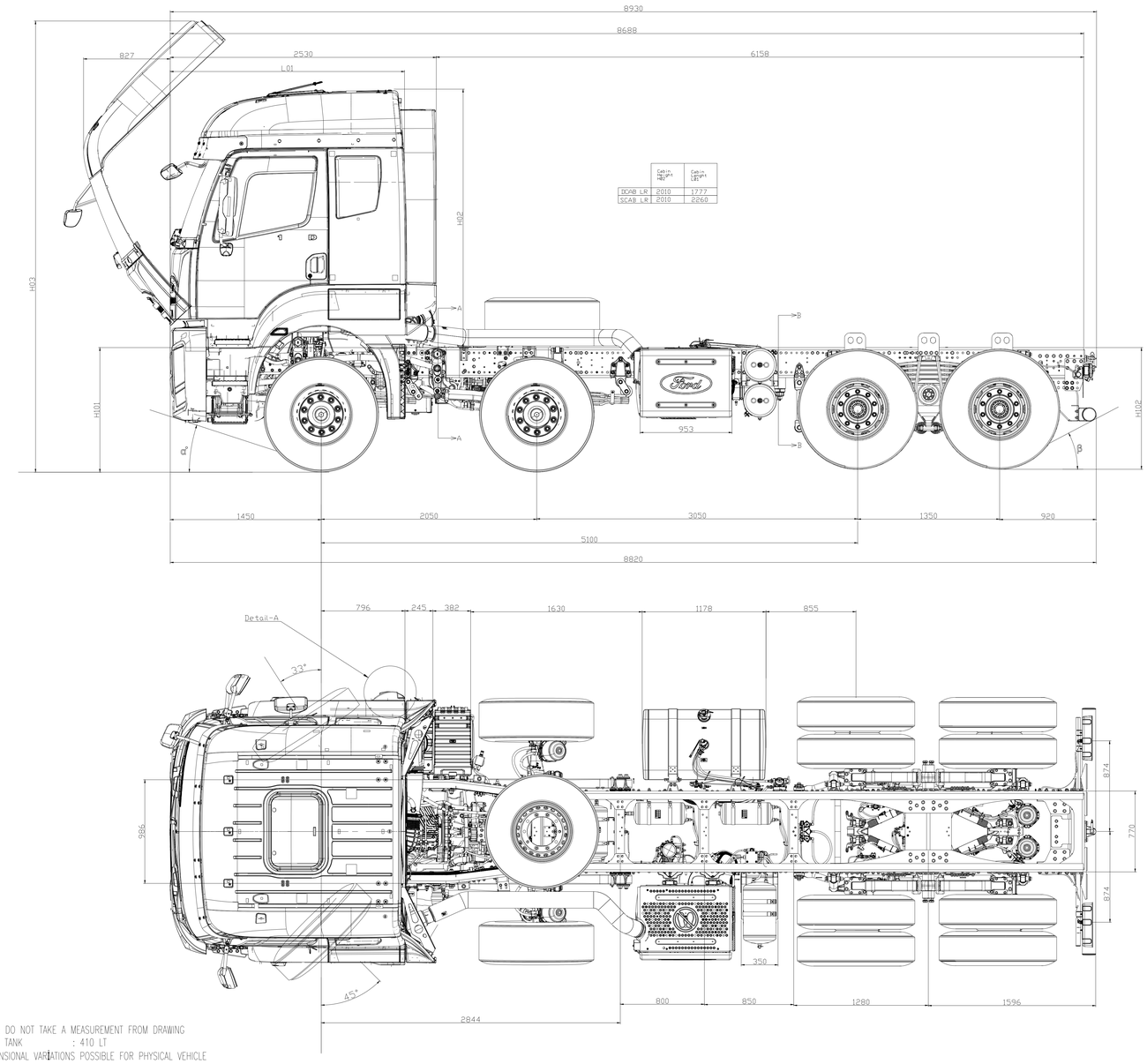

	Cabin Height H1	Cabin Length L1
DCAB LR	2010	1777
SCAB LR	2010	2260

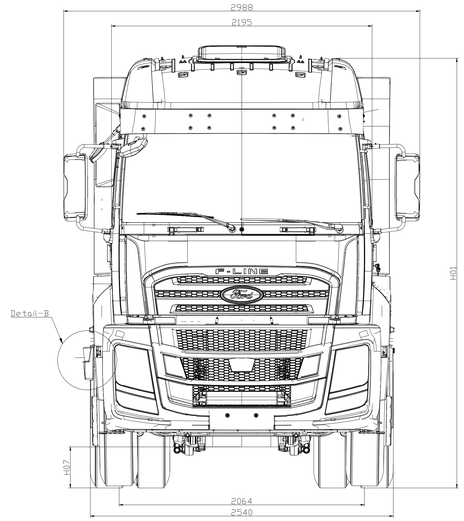

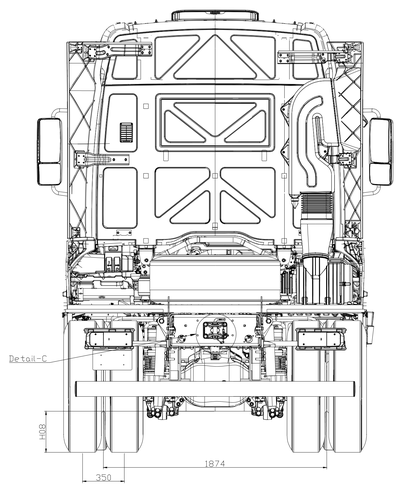

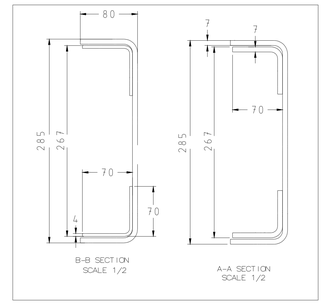

DETAIL-A

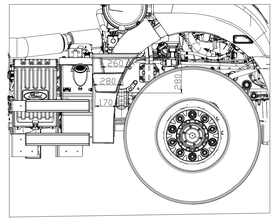

DETAIL-B

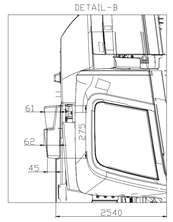

DETAIL-C

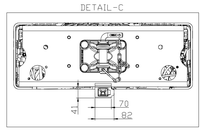

NOTE DO NOT TAKE A MEASUREMENT FROM DRAWING
FUEL TANK : 410 LT
DIMENSIONAL VARIATIONS POSSIBLE FOR PHYSICAL VEHICLE
ALL TOLERANCE +/- 50mm
(FOR UNLADEN VEHICLE)

NOT : RESIM UZERINDEN OLCU ALMAYINIZ

YAKIT TANKI HACMI : 410 LT
FIZIKSEL ARACTA OLCU FARKLILIKLARI OLABILIR.

TÜM ÖLÇÜLERDE TOLERANS +/- 50mm
(ÖLÇÜLER YÜKSÜZ ARAÇ İÇİNDİR)

ALL MEASUREMENTS WERE GIVEN AS REFERENCE. ALL MEASUREMENTS SHOULD BE TAKEN FROM THE VEHICLE FOR ANY MODIFICATIONS AND/OR UPFIT CONTRUCTION.

ARACA ILISKIN BIR ISLEM YAPILMASI GEREKEN DURUMLARDA , ISLEM YAPILACAK ARAC UZERINDE FIILI OLCUM VE INCELEME YAPILMALI.
TESPIT EDILEN OLCU VE DIGER OZELLIKLERE GORE ISLEM YAPILMALIDIR.

Tire Size		Front Chassis Height (unladen)	Rear Chassis Height (unladen)	Front Ground Clearance-Axle (laden)	Rear Ground Clearance-Axle (laden)	Vehicle Overall Height (Unloden)	Approach Angle	Departure Angle
Front	Rear	H101	H102	H07	H08	H01	α	β
315/80 R22.5	315/80 R22.5	1195	1188	354	295	3654	25	25

LTRS	REVISIONS			
ORIGINATOR	CHECKER	ENGR APP	MATL APP	

PART AS RECEIVED AT THE FORD PLANT OR SERVICE PART PACKAGER/WAREHOUSE SHALL BE FREE OF ANY CORROSION ALIGNED WITH THE FORD CUSTOMER SERVICE DIVISION (FCSD) PACKAGING AND SHIPPING GUIDE. CORROSION INHIBITORS OR FOREIGN MATERIALS DETRIMENTAL TO THE INSTALLATION OR FUNCTION OF THE PART MUST BE REMOVABLE BY THE INTENDED CLEANING METHOD

CHANGES TO DESIGN, COMPOSITION OR PROCESSING OF THE PART PREVIOUSLY APPROVED FOR PRODUCTION REQUIRE PRIOR APPROVAL FROM FORD MOTOR COMPANY PRODUCT ENGINEERING. REFER TO ISO/TS 16949

FOR CURRENT RELEASE STATUS, SEE THE WERS ENGINEERING NOTICE

FOR THE PURPOSES OF GEOMETRIC TOLERANCING, ALL DIMENSIONAL INFORMATION CONTAINED IN THE CAD MODEL IS BASIC (THEORETICAL)

REFERENCE	N/A
PART MUST COMPLY WITH RESTRICTED SUBSTANCE MANAGEMENT STANDARD WSS-M99P9999-A1 TO SAFEGUARD HEALTH, SAFETY AND THE ENVIRONMENT	
DRAFTED IN ACCORDANCE WITH FORD MOTOR COMPANY ENGINEERING CAD AND DRAFTING STANDARDS VERSION 28.1	3RD ANGLE PROJ. DIMENSIONS ARE IN MILLIMETERS
CAD TYPE: K-CATIA5	CAD LOC.: TC
CAD FILE: HL-RC46-50000-FA-DWG-01	DTMC IS MASTER
OPER. NO.: N/A	UNIT: N/A
DRAWING: HL-RC46-50000-FA-DWG-01	
DESIGN: UGUL ME	DETAIL: DDZBALCI
CHECKED: MHURRIYI	SAFETY MFG USE
TITLE: 4148D_8X4_SC_EU6_LF RT_XHR_MS_5100WB	SHT 1 OF 1
	N/A
SCALE: 1:32	DATE: 20231105
DIVISION: N/A	PLANT: SAKARYA

FORD MOTOR COMPANY

PRINTED COPIES ARE UNCONTROLLED