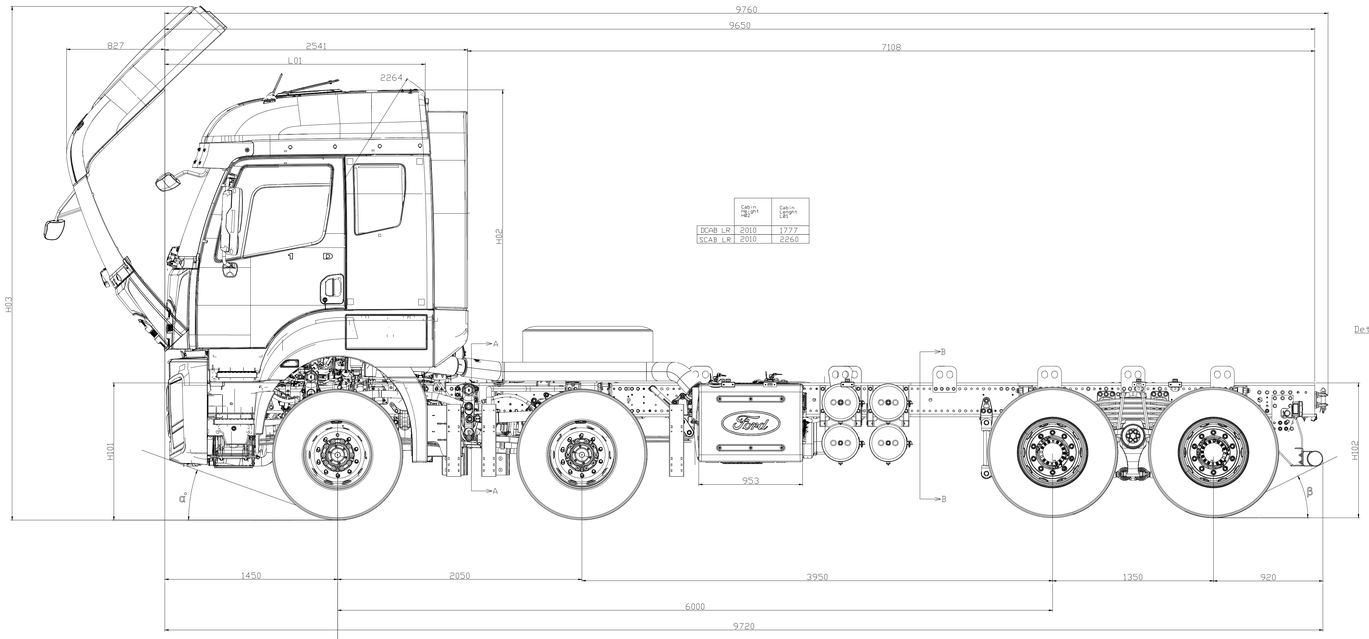

	Cabin Height H1	Cabin Length L01
DCAB LR	2010	1777
SCAB LR	2010	2260

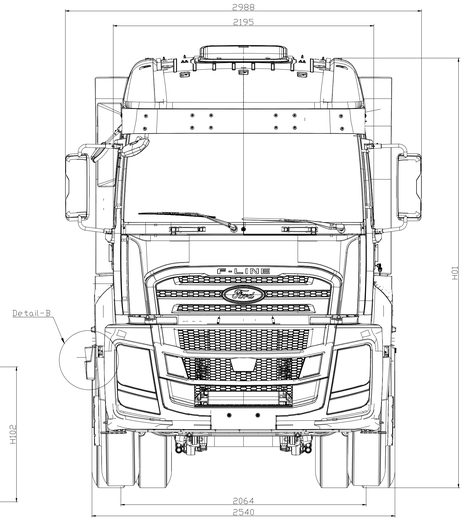

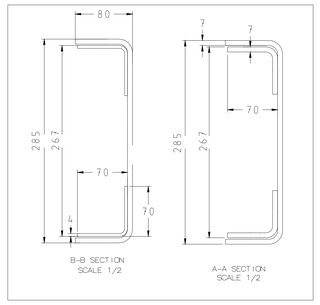

DETAIL-A

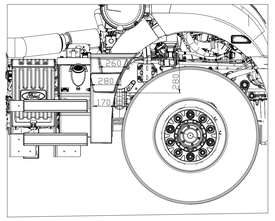

DETAIL-B

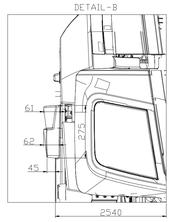

DETAIL-C

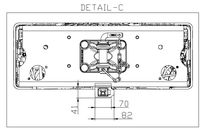

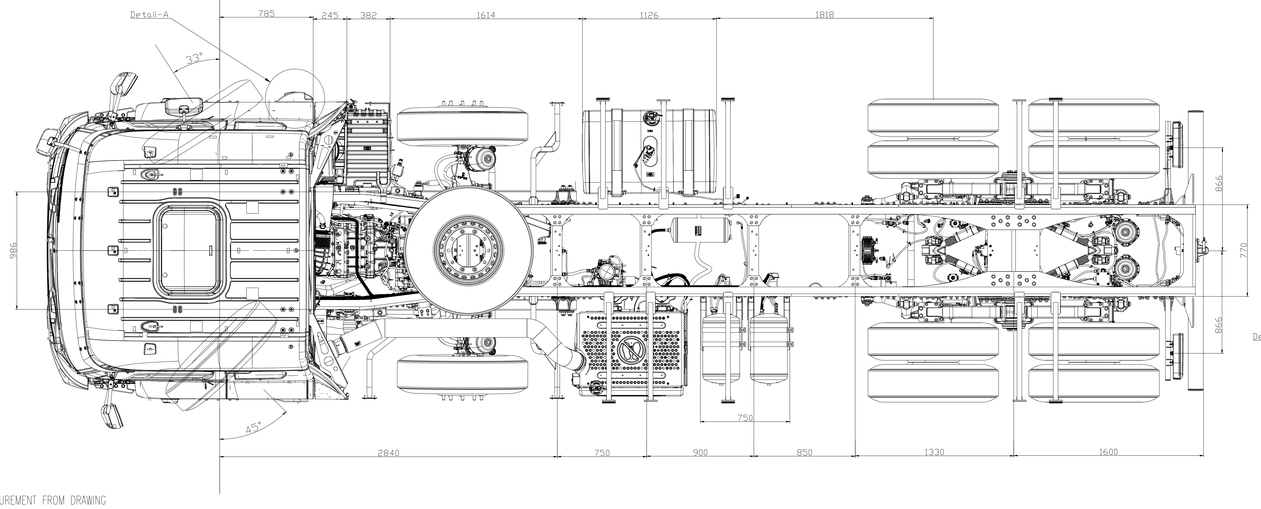

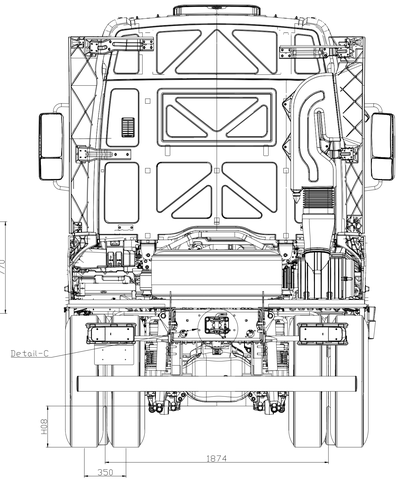

NOTE DO NOT TAKE A MEASUREMENT FROM DRAWING
FUEL TANK : 410 LT
DIMENSIONAL VARIATIONS POSSIBLE FOR PHYSICAL VEHICLE
ALL TOLERANCE +/- 50mm
(FOR UNLADEN VEHICLE)

NOT : RESIM UZERINDEN OLCU ALMAYINIZ

YAKIT TANKI HACMI : 410 LT
FIZIKSEL ARACTA OLCU FARKLILIKLARI OLABILIR.

TÜM ÖLÇÜLERDE TOLERANS +/- 50mm
(ÖLÇÜLER YÜKSÜZ ARAÇ İÇINDIR)

ALL MEASUREMENTS WERE GIVEN AS REFERENCE. ALL MEASUREMENTS SHOULD BE TAKEN FROM THE VEHICLE FOR ANY MODIFICATIONS AND/OR UPFIT CONTRUCTION.

ARACA ILISKIN BIR ISLEM YAPILMASI GEREKEN DURUMLARDA ,ISLEM YAPILACAK ARAC UZERINDE FIILI OLCUM VE INCELEME YAPILMALI.
TESPIT EDILEN OLCU VE DIGER OZELLIKLERE GORE ISLEM YAPILMALIDIR.

Tire Size		Front Chassis Height (unladen)	Rear Chassis Height (unladen)	Front Ground Clearance-Axle (laden)	Rear Ground Clearance-Axle (laden)	Vehicle Overall Height (Unladen)	Approach Angle	Departure Angle
Front	Rear	H101	H102	H07	H08	H01	α	β
315/80 R22.5	315/80 R22.5	1192	1185	380	313	3654	25	25

LTRS	REVISIONS			
ORIGINATOR	CHECKER	ENGR APP	MATL APP	

PART AS RECEIVED AT THE FORD PLANT OR SERVICE PART PACKAGER/WAREHOUSE SHALL BE FREE OF ANY CORROSION ALIGNED WITH THE FORD CUSTOMER SERVICE DIVISION PRACTICE. PART SHALL BE FREE OF CORROSION INHIBITORS OR FOREIGN MATERIALS DETRIMENTAL TO THE INSTALLATION OR FUNCTION OF THE PART MUST BE REMOVABLE BY THE INTENDED CLEANING METHOD

CHANGES TO DESIGN, COMPOSITION OR PROCESSING OF THE PART PREVIOUSLY APPROVED FOR PRODUCTION REQUIRE PRIOR APPROVAL FROM FORD MOTOR COMPANY PRODUCT ENGINEERING. REFER TO ISO/TS 16949

FOR CURRENT RELEASE STATUS, SEE THE WERS ENGINEERING NOTICE

FOR THE PURPOSES OF GEOMETRIC TOLERANCING, ALL DIMENSIONAL INFORMATION CONTAINED IN THE CAD MODEL IS BASIC (THEORETICAL)

REFERENCE	N/A		
PART MUST COMPLY WITH RESTRICTED SUBSTANCE MANAGEMENT STANDARD WSS-M99P9999-A1 TO SAFEGUARD HEALTH, SAFETY AND THE ENVIRONMENT			
DRAFTED IN ACCORDANCE WITH FORD MOTOR COMPANY ENGINEERING CAD AND DRAFTING STANDARDS VERSION 2.0	3RD ANGLE PROJ DIMENSIONS ARE IN MILLIMETERS		
CAD TYPE K-CATIA5	CAD LOC. TC	CAD FILE HL-RC46-50000-EZ-DWG-01	DTMC IS MASTER
OPER. NO. N/A	UNIT N/A	DRAWING HL-RC46-50000-EZ-DWG-01	
DESIGN LOCATION	DETAIL DOZBALCI	TITLE 414BD_8X4_SC_EU6_LF RT_MS_6000WB	SHT 1 OF 1
CHECKED MHURRIYET	SAFETY MFG USE		N/A
SCALE 1:32	DATE 20231105	DIVISION N/A PLANT SAKARYA	
FORD MOTOR COMPANY			

PRINTED COPIES ARE UNCONTROLLED