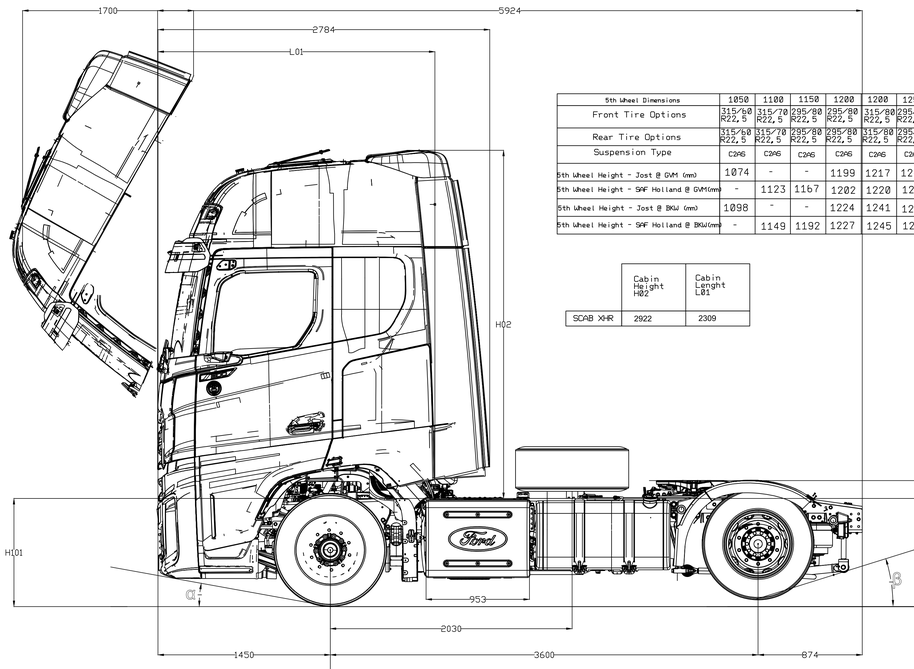

5th Wheel Dimensions	1050	1100	1150	1200	1200	1250	1250
Front Tire Options	315/60 R22,5	315/70 R22,5	295/80 R22,5	295/80 R22,5	315/80 R22,5	295/80 R22,5	315/80 R22,5
Rear Tire Options	315/60 R22,5	315/70 R22,5	295/80 R22,5	295/80 R22,5	315/80 R22,5	295/80 R22,5	315/80 R22,5
Suspension Type	C2AG	C2AG	C2AG	C2AG	C2AG	C2AG	C2AG
5th Wheel Height - Jost @ GVM (mm)	1074	-	-	1199	1217	1244	1262
5th Wheel Height - SAF Holland @ GVM(mm)	-	1123	1167	1202	1220	1268	-
5th Wheel Height - Jost @ BKW (mm)	1098	-	-	1224	1241	1269	1287
5th Wheel Height - SAF Holland @ BKW(mm)	-	1149	1192	1227	1245	1293	1311

	Cabin Height H02	Cabin Lenght L01
SCAB XHR	2922	2309

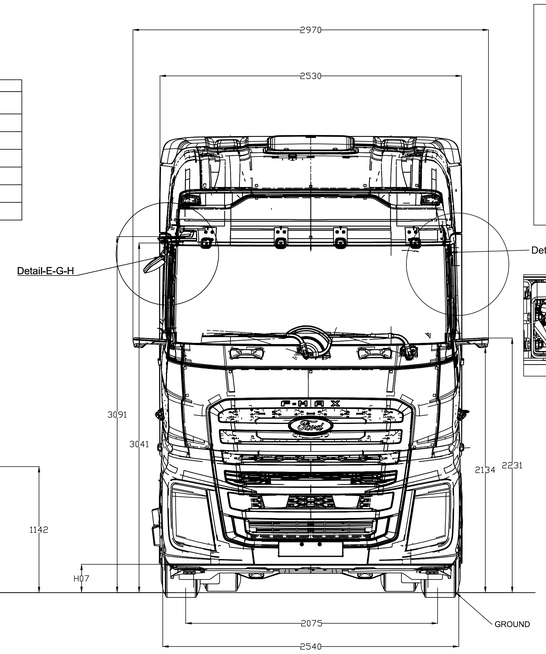

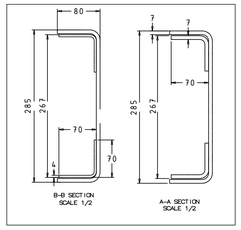

DETAIL-A

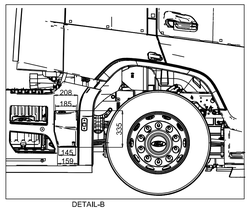

DETAIL-B

DETAIL-C

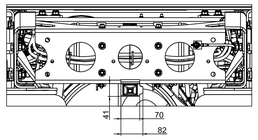

DETAIL-D

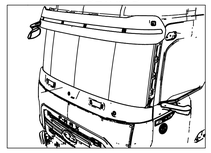

EXTERIOR MIRROR #1

DETAIL-E

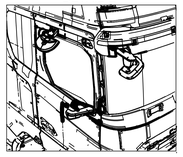

EXTERIOR MIRROR #1

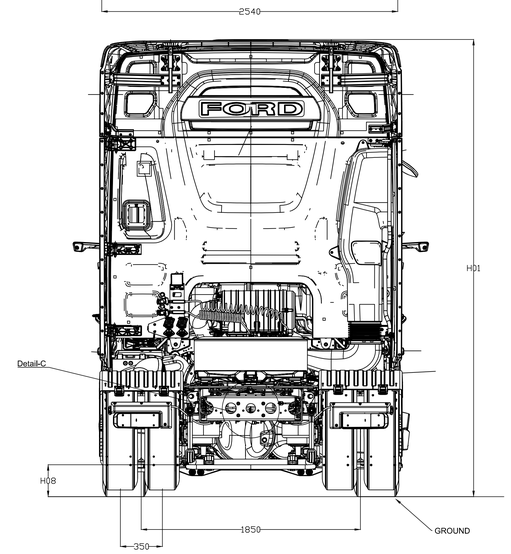

DETAIL-F

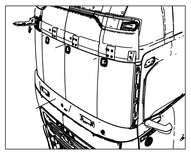

EXTERIOR MIRROR #2

DETAIL-G

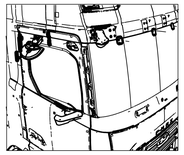

EXTERIOR MIRROR #2

DETAIL-H

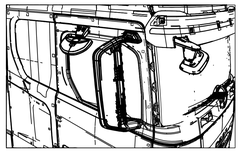

EXTERIOR MIRROR

DETAIL-I

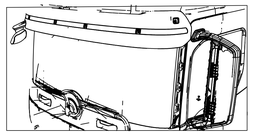

EXTERIOR MIRROR

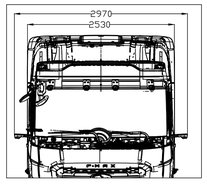

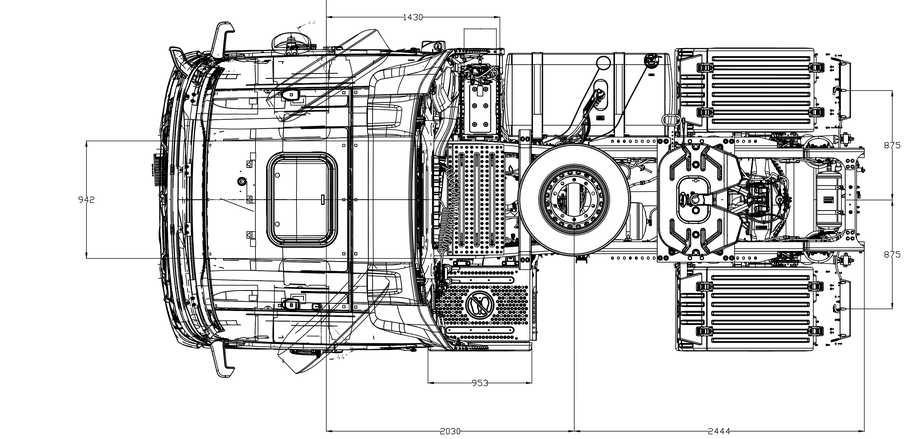

NOTE DO NOT TAKE A MEASUREMENT FROM DRAWING
FUEL TANK : 600 LT
DIMENSIONAL VARIATIONS POSSIBLE FOR PHYSICAL VEHICLE
ALL TOLERANCE +/- 50mm
(FOR UNLADEN VEHICLE)

NOT : RESIM UZERINDEN OLCU ALMAYINIZ
YAKIT TANKI HACMI: 600 LT
FIZIKSEL ARACTA OLCU FARKLILIKLARI OLABILIR.

TUM ÖLÇÜLERDE TOLERANS +/- 50mm
(ÖLÇÜLER YOKSUZ ARAÇ İÇİNDİR)

ALL MEASUREMENTS WERE GIVEN AS REFERENCE. ALL MEASUREMENTS SHOULD BE TAKEN FROM THE VEHICLE FOR ANY MODIFICATIONS AND/OR UPFIT CONTRUCTION.
ARACA İLİŞKİN BİR İŞLEM YAPILMASI GEREKEN DURUMLARDA , İŞLEM YAPILACAK ARAC UZERINDE FIILI OLCUM VE INCELEME YAPILMALI, TESPİT EDİLEN ÖLÇÜ VE DİĞER ÖZELLİKLERE GÖRE İŞLEM YAPILMALIDIR.

Tire Size		Front Chassis Height (unladen)	Rear Chassis Height (unladen)	Front Ground Clearance-Axle (laden)	Rear Ground Clearance-Axle (laden)	Vehicle Overall Height (Unladen)	Approach Angle	Departure Angle
Front	Rear	H101	H102	H07	H08	H01	α	β
295/80R X 22.5-18 T/L	295/80R X 22.5-18 T/L	990	991	305	230	3907	15.2°	13,4°
315/60 R22.5	315/60 R22.5	945	944	182	106	3862	11.4°	9.4°
315/80 R22.5	315/80 R22.5	975	976	272	210	3876	12°	13,5°
315/70 R22.5	315/70 R22.5	975	976	222	210	3915	13°	14°
385/55R X 22.5-18 T/L	315/70 R22.5	971	976	217	210	3920	12.7°	14°
385/65R X 22.5-18 T/L	315/80 22.5	1006	1008	252	242	3947	14.5°	16.5°
355/55R X 22.5-18 T/L	315/60 22.5	942	944	188	180	3882	11.5°	12.5°

EXTERIOR MIRROR <Convertional Mirrors>	DETAIL H-I
EXTERIOR MIRROR #1 <Digital Mirror System - Basic>	DETAIL D-E
EXTERIOR MIRROR #2 <Digital Mirror System - Premium>	DETAIL F-G

LTRS	REVISIONS			
ORIGINATOR	CHECKER	ENGR APP	MATL APP	

PART AS RECEIVED AT THE FORD PLANT OR SERVICE PART PACKAGER/WAREHOUSE SHALL BE FREE OF ANY CORROSION ALIGNED WITH THE FORD CUSTOMER SERVICE DIVISION (FCSD) PACKAGING AND SHIPPING GUIDE. CORROSION INHIBITORS OR FOREIGN MATERIALS DETRIMENTAL TO THE INSTALLATION OR FUNCTION OF THE PART MUST BE REMOVABLE BY THE INTENDED CLEANING METHOD

CHANGES TO DESIGN, COMPOSITION OR PROCESSING OF THE PART PREVIOUSLY APPROVED FOR PRODUCTION REQUIRE PRIOR APPROVAL FROM FORD MOTOR COMPANY PRODUCT ENGINEERING. REFER TO 1S0/TS 16949

FOR CURRENT RELEASE STATUS, SEE THE WERS ENGINEERING NOTICE

FOR THE PURPOSES OF GEOMETRIC TOLERANCING, ALL DIMENSIONAL INFORMATION CONTAINED IN THE CAD MODEL IS BASIC (THEORETICAL)

REFERENCE N/A

PART MUST COMPLY WITH RESTRICTED SUBSTANCE MANAGEMENT STANDARD WSS-M99P9999-A1 TO SAFEGUARD HEALTH, SAFETY AND THE ENVIRONMENT

DRAFTED IN ACCORDANCE WITH FORD MOTOR COMPANY ENGINEERING CAD AND DRAFTING STANDARDS VERSION 28.1

3RD ANGLE PROJ
DIMENSIONS ARE IN MILLIMETERS

CAD TYPE	CAD LOC.	CAD FILE	BINC
C-CATIA5	IC	HL-TC46-00001-B8	IS MASTER
OPER. NO.	UNIT	DRAWING	
N/A	N/A	HL-TC46-00001-B8-DWG-01	
DESIGN	DETAIL	TITLE	SHT 1 OF 1
KSIKLAR	ODZBALCI	H625_1050_4X2_XHR_SC_EU6_LWC _CDAS_AT_TRACTOR_3600WB	
CHECKED	SAFETY		N/A
MHURRIYI	MFG USE		
SCALE	DATE	DIVISION N/A	
1:12	20231104	PLANT INONU	

FORD MOTOR COMPANY

PRINTED COPIES ARE UNCONTROLLED