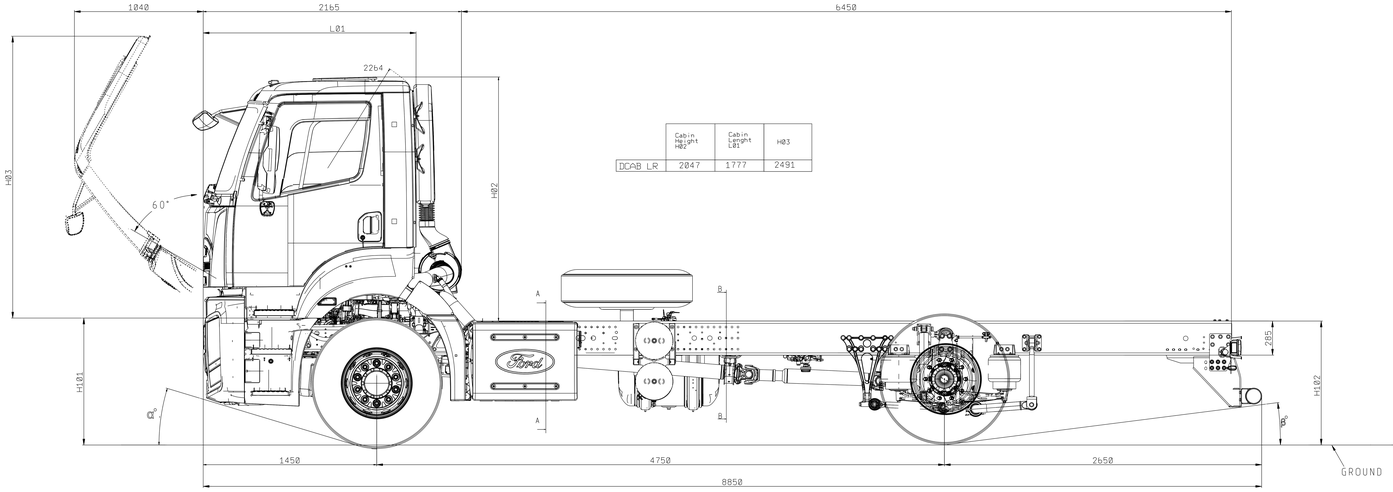

	Cabin Height H02	Cabin Height L01	H03
DCAB LR	2047	1777	2491

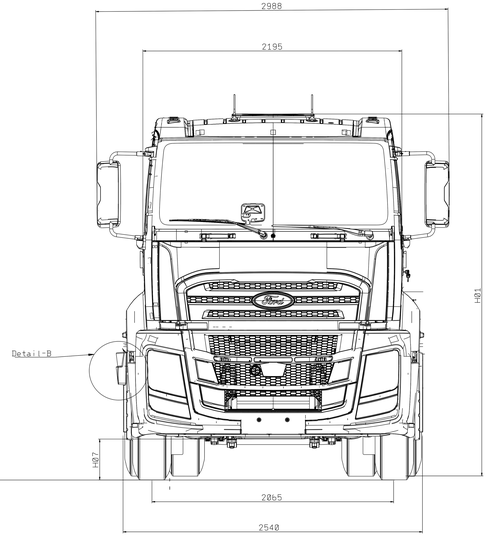

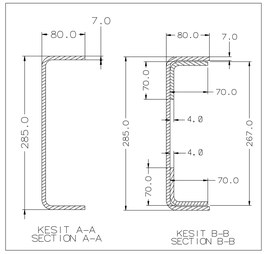

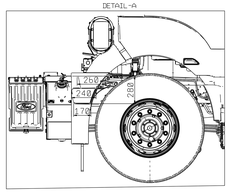

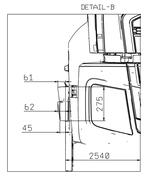

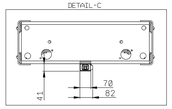

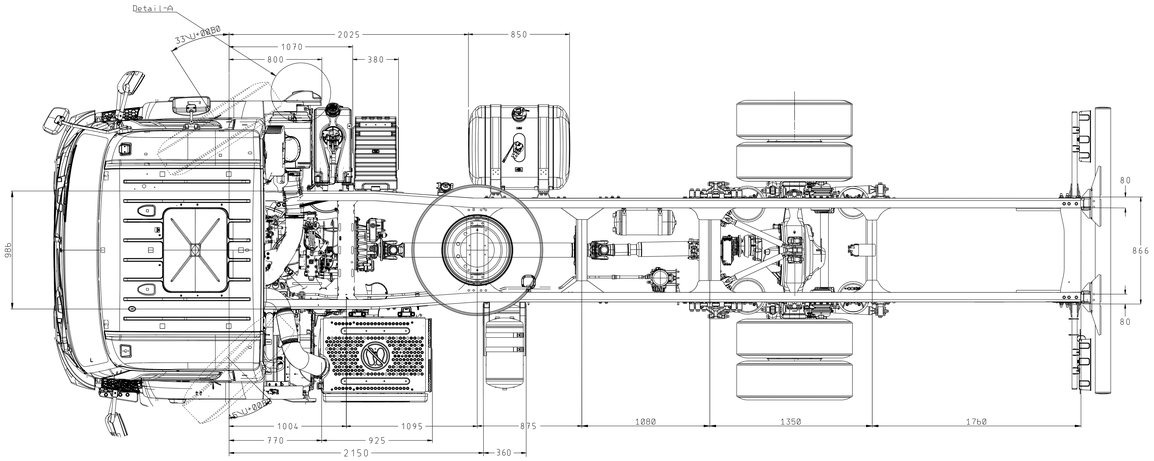

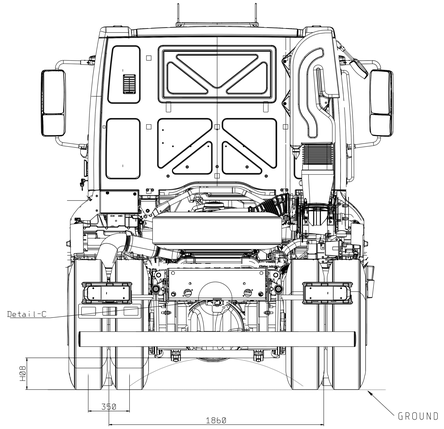

NOTE DO NOT TAKE A MEASUREMENT FROM DRAWING

FUEL TANK : 350LT
ALL TOLERANCE ±50mm
(FOR UNLADEN VEHICLE)

NOT: RESIM UZERINDEN OLCU ALMAYINIZ.

FUEL TANK : 350LT
TUM OLCULERDE TOLERANS ±50mm
(OLCULER YUKSUZ ARAC ICINDIR)

ALL MEASUREMENTS WERE GIVEN AS REFERENCE. ALL MEASUREMENTS SHOULD BE TAKEN FROM THE VEHICLE FOR ANY MODIFICATIONS AND/OR UPFIT CONSTRUCTION.

ARACA ILISKIN BIR ISLEM YAPILMASI GEREKEN DURUMLARDA , ISLEM YAPILACAK ARAC UZERINDE FIILI OLCUM VE INCELEME YAPILMALI.
TESPIT EDILEN OLCU VE DIGER OZELLIKLERE GORE ISLEM YAPILMALIDIR.

Tire Size		Front Chassis Height (unladen)	Rear Chassis Height (unladen)	Front Ground Clearance-Axle (laden)	Rear Ground Clearance-Axle (laden)	Vehicle Overall Height (Unladen)	Approach Angle	Departure Angle
Front	Rear	H101	H102	H07	H08	H01	α	β
315/60 R 22,5	315/60 R 22,5	1016	955	237	176	3080	12,96	8,1
315/70 R 22,5	315/70 R 22,5	1047	968	267	206	3111	14,44	8,85
315/80 R 22,5	315/80 R 22,5	1078	982	298	236	3142	15,92	9,6

LTRS	REVISIONS			
ORIGINATOR	CHECKER	ENGR APP	MATL APP	

PART AS RECEIVED AT THE FORD PLANT OR SERVICE PART PACKAGE/WAREHOUSE SHALL BE FREE OF ANY CORROSION PRODUCT ACCEPTABLE TO THE CUSTOMER SERVICE DIVISION. ALSO, PARTS SHALL BE FREE OF ANY CONTAMINATION (MOISTURE) OR FOREIGN MATERIALS DETRIMENTAL TO THE INSTALLATION OR FUNCTIONING OF THE PART. REFER TO ISO/TS 16949 FOR ADDITIONAL CLEANLINESS METHOD

CHANGES TO DESIGN, COMPOSITION OR PROCESSING OF THIS PART MUST ONLY BE MADE AFTER THE CUSTOMER REQUIRE PRIOR APPROVAL FROM FORD MOTOR COMPANY PRODUCT ENGINEERING. REFER TO ISO/TS 16949

FOR CURRENT RELEASE STATUS, SEE THE WERS ENGINEERING NOTICE

FOR THE PURPOSES OF GEOMETRIC TOLERANCING, ALL DIMENSIONS INFORMATION CONTAINED IN THE CAD MODEL IS BASIC (THEORETICAL)

REFERENCE	N/A
PART MUST COMPLY WITH RESTRICTED SUBSTANCE MANAGEMENT STANDARD WSS-M99P9999-A1 TO SAFEGUARD HEALTH, SAFETY AND THE ENVIRONMENT	
DRAFTED IN ACCORDANCE WITH FORD MOTOR COMPANY ENGINEERING CAD AND DRAFTING STANDARDS, VERSION 28.1	3RD ANGLE PROJ DIMENSIONS ARE IN MILLIMETERS
CAD TYPE / CAD LOC. / CAD FILE	DIMS
K-CATIAS / TC / HL-VRC4b-000058-CH-DLG-01/1	IS MASTER
OPER. NO. / UNIT / DRAWING	
N/A / N/A / HL-VRC4b-000058-CHA	
DESIGN / DETAIL / TITLE	SHT 1
DOURMAZ2 / DOURMAZ2 / 1933_4x2_DC_4750WB AIR_SUSP_AALKB_Eb	OF 1
CHECKED / SAFETY /	N/A
MUZUNGOR / MFG USE /	
SCALE 1:10 / DATE 20230921 / DIVISION N/A / PLANT INONU	

FORD MOTOR COMPANY

PRINTED COPIES ARE UNCONTROLLED