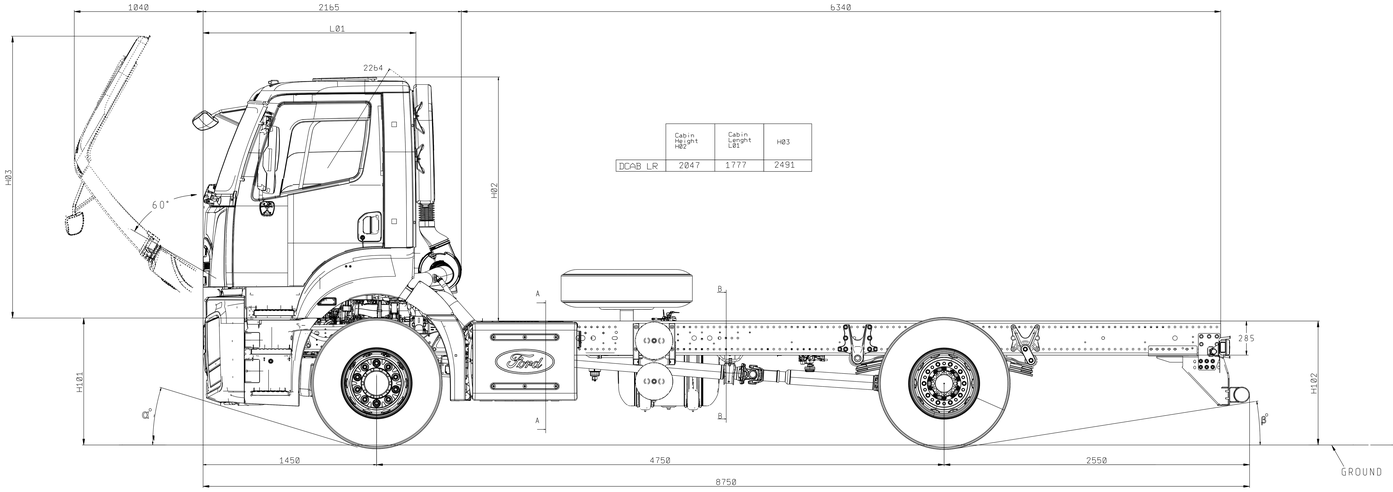

	Cabin Height H03	Cabin Length L01	H03
DCAB LR	2047	1777	2491

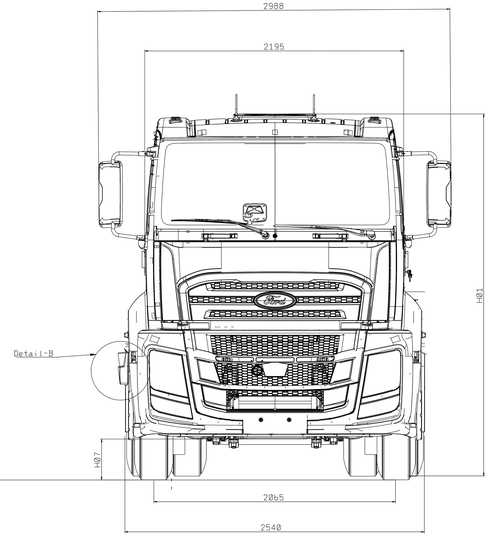

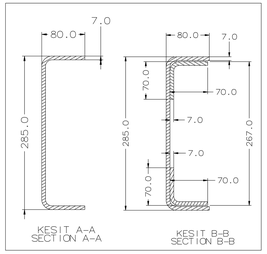

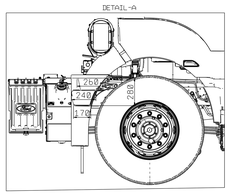

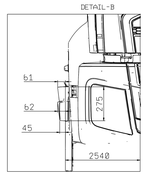

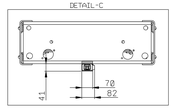

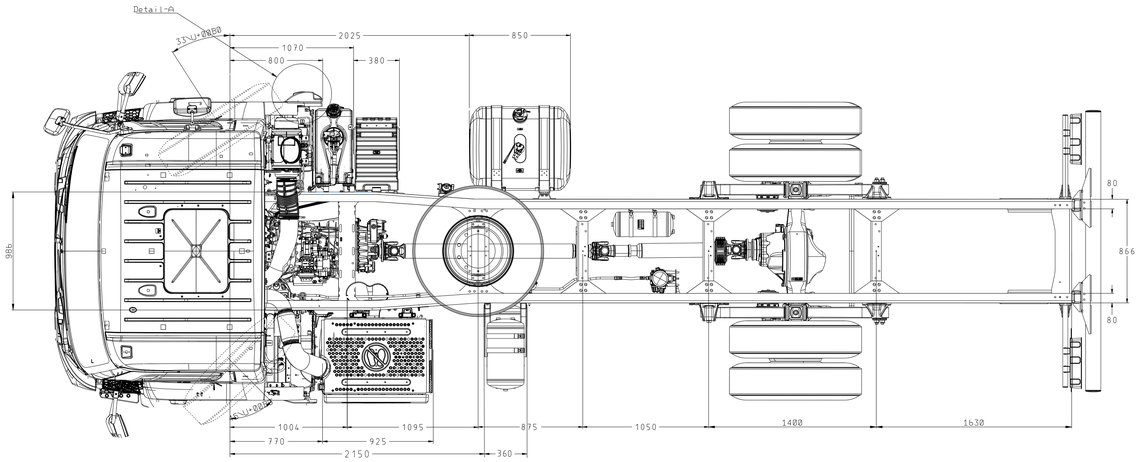

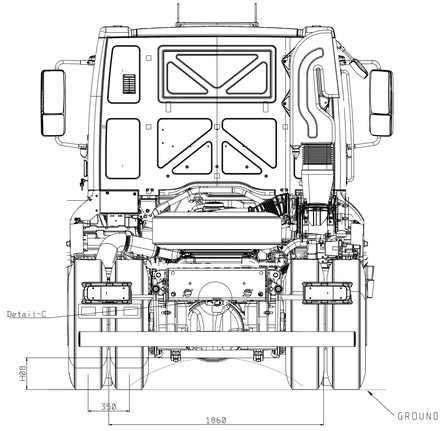

NOTE DO NOT TAKE A MEASUREMENT FROM DRAWING

FUEL TANK : 350LT
ALL TOLERANCE ±50mm
(FOR UNLADEN VEHICLE)

NOT: RESIM UZERINDEN OLCU ALMAYINIZ.

FUEL TANK : 350LT
TUM OLCULERDE TOLERANS ±50mm
(OLCULER YUKSUZ ARAC ICINDIR)

ALL MEASUREMENTS WERE GIVEN AS REFERENCE. ALL MEASUREMENTS SHOULD BE TAKEN FROM THE VEHICLE FOR ANY MODIFICATIONS AND/OR UPFIT CONSTRUCTION.

ARACA ILISKIN BIR ISLEM YAPILMASI GEREKEN DURUMLARDA , ISLEM YAPILACAK ARAC UZERINDE FIILI OLCUM VE INCELEME YAPILMALI, TESPIT EDILEN OLCU VE DIGER OZELLIKLERE GORE ISLEM YAPILMALIDIR.

Tire Size		Front Chassis Height (unladen)	Rear Chassis Height (unladen)	Front Ground Clearance-Axle (laden)	Rear Ground Clearance-Axle (laden)	Vehicle Overall Height (Unladen)	Approach Angle	Departure Angle
Front	Rear	H101	H102	H07	H08	H01	α	β
315/70 R 22,5	315/70 R 22,5	1059	1075	274	286	3123	14	10,30
315/80 R 22,5	315/80 R 22,5	1072	1131	303	231	3148	15,18	11,8

LTRS	REVISIONS			
ORIGINATOR	CHECKER	ENGR APP	MATL APP	

PART AS RECEIVED AT THE FORD PLANT OR SERVICE PART PACKAGE/WAREHOUSE SHALL BE FREE OF ANY CORROSION PRODUCT ACCEPTING THE FORD CUSTOMER SERVICE DIVISION CORROSION PROTECTION SPECIFICATION. CONTAMINATION (WASTERS) OR FOREIGN MATERIALS (DETRIMENTAL TO THE INSTALLATION OR FUNCTIONING OF THE PART) MUST BE REMOVED PRIOR TO PACKAGING OR CLEANING METHOD

CHANGES TO DESIGN, COMPOSITION OR PROCESSING REQUIRED FOR PRODUCTION APPROVAL OR PRODUCTION REQUIRE PRIOR APPROVAL FROM FORD MOTOR COMPANY PRODUCT ENGINEERING. REFER TO ISSUITS 7NRW

FOR CURRENT RELEASE STATUS, SEE THE WERS ENGINEERING NOTICE

FOR THE PURPOSES OF GEOMETRIC TOLERANCING, ALL DIMENSIONS INFORMATION CONTAINED IN THE CAD MODEL IS BASIC (THEORETICAL)

REFERENCE	N/A
PART MUST COMPLY WITH RESTRICTED SUBSTANCE MANAGEMENT STANDARD WSS-M99P9999-A1 TO SAFEGUARD HEALTH, SAFETY AND THE ENVIRONMENT	
DRAFTED IN ACCORDANCE WITH FORD MOTOR COMPANY ENGINEERING CAD AND DRAFTING STANDARDS, VERSION 28.1	3RD ANGLE PROJ DIMENSIONS ARE IN MILLIMETERS
CAD TYPE / CAD LOC.	CAD FILE / DIMC
K-CATIAS / TC	HL-VRC4b-000058-BN-DLC-01/1 / IS MASTER
OPER. NO. / UNIT	DRAWING
N/A / N/A	HL-VRC4b-000058-BN-A
DESIGN / DETAIL	TITLE / SHT 1
DOURMAZ2 / DOURMAZ2	1833_4x2_DC_4750WB MECH_SUSP_AALKB_E6 / OF 1
CHECKED / SAFETY	N/A
MUZUNGOR / MFG USE	
SCALE / DATE	DIVISION / N/A
1:10 / 20230921	PLANT / INONU

FORD MOTOR COMPANY

PRINTED COPIES ARE UNCONTROLLED