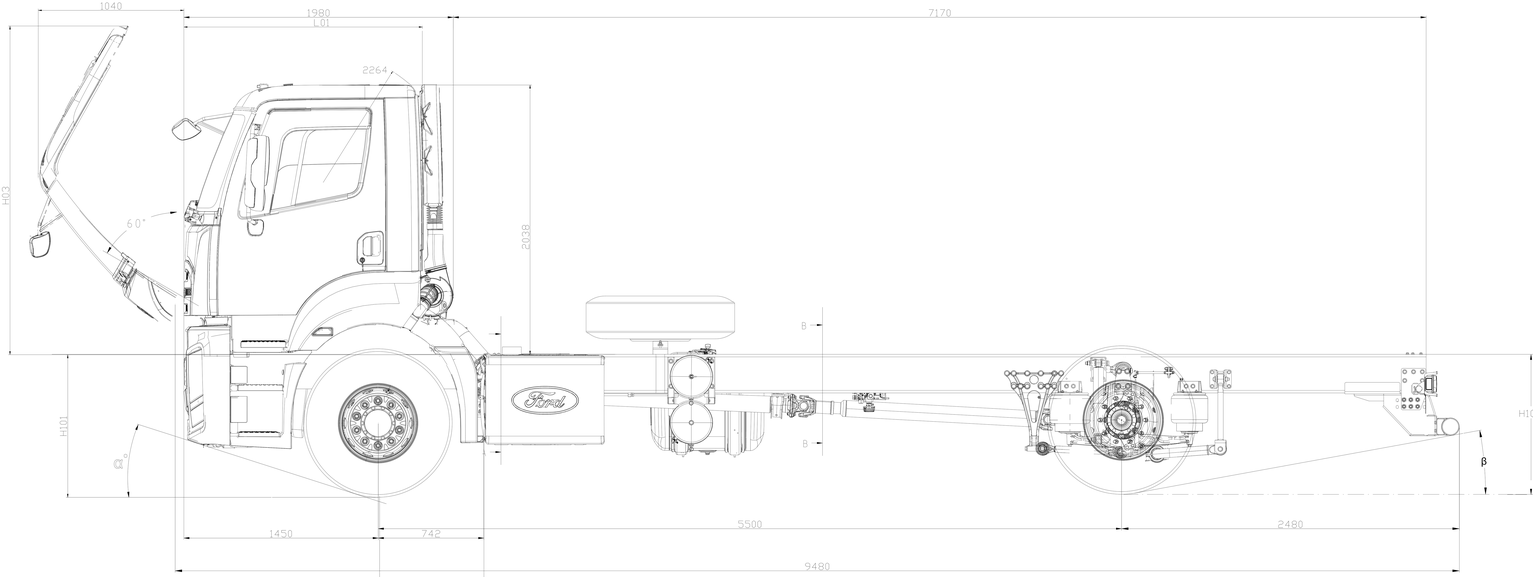

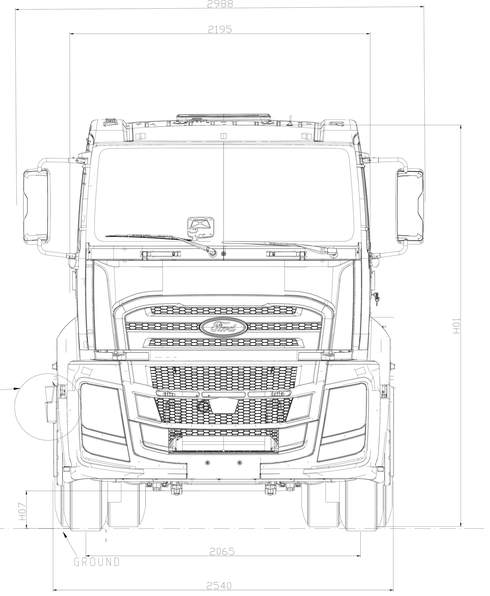

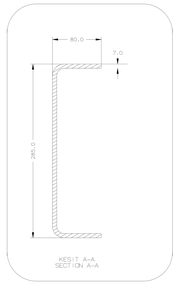

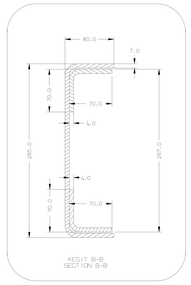

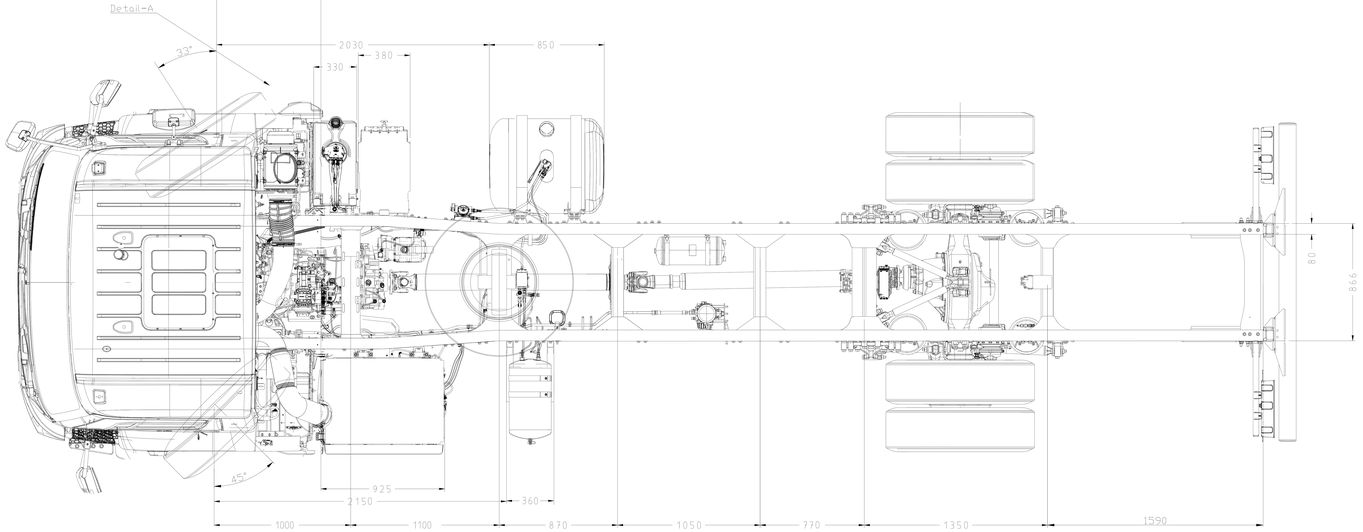

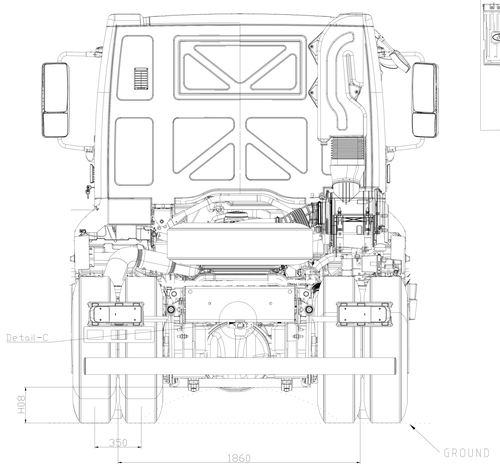

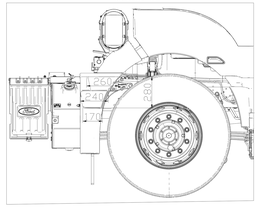

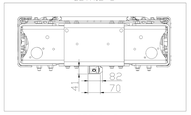

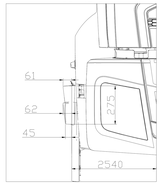

NOTE DO NOT TAKE A MEASUREMENT FROM DRAWING

FUEL TANK : 350LT
ALL TOLERANCE ±50mm
(FOR UNLADEN VEHICLE)

NOT: RESIM UZERINDEN OLCU ALMAYINIZ.

TUM OLCULERDE TOLERANS ±50mm
(OLCULER YUKSUZ ARAC ICINDIR)

ALL MEASUREMENTS WERE GIVEN AS REFERANCE. ALL MEASUREMENTS SHOULD BE TAKEN FROM THE VEHICLE FOR ANY MODIFICATIONS AND/OR UPFIT CONSTRUCTION.

ARAÇA ILISKIN BIR ISLEM YAPILMASI GEREKEN DURUMLARDA ISLEM YAPILACAK ARAÇ UZERINDE FIILI OLCUM VE INCELEME YAPILMALI VE TESPIT EDILEN OLCU VE DIGER OZELLIKLERE GORE ISLEM YAPILMALIDIR.

Tire Size		Front Chassis Height (unladen)	Rear Chassis Height (unladen)	Front Ground Clearance-Axle (laden)	Rear Ground Clearance-Axle (laden)	Vehicle Overall Height (Unladen)	Approach Angle	Departure Angle
Front	Rear	H101	H102	H07	H08	H01	α	β
315/60 R 22,5	315/60 R 22,5	1023	1069	242	175	3049	12,4	10,20
315/70 R 22,5	315/70 R 22,5	1059	1075	274	206	3123	14	10,30
315/80 R 22,5	315/80 R 22,5	1072	1131	303	231	3148	15,18	11,8

LTRS	REVISIONS			
ORIGINATOR	CHECKER	ENGR APP	MATL APP	

PART AS RECEIVED AT THE FORD PLANT OR SERVICE PART PACKAGER/WAREHOUSE SHALL BE FREE OF ANY CORROSION. THE PART MUST COMPLY WITH FORD MOTOR COMPANY ISO301 PACKAGING AND SHIPPING STANDARD. CORROSION INHIBITORS OR FOREIGN MATERIALS DETRIMENTAL TO THE INSTALLATION OR FUNCTION OF THE PART MUST BE REMOVABLE BY THE INTENDED CLEANING METHOD

CHANGES TO DESIGN, COMPOSITION OR PROCESSING OF THE PART PREVIOUSLY APPROVED FOR PRODUCTION REQUIRES PRIOR APPROVAL FROM FORD MOTOR COMPANY PRODUCT ENGINEERING. REFER TO ISO/TS 16949

FOR CURRENT RELEASE STATUS, SEE THE WEB ENGINEERING NOTICE

FOR THE PURPOSES OF GEOMETRIC TOLERANCING, ALL DIMENSIONAL INFORMATION CONTAINED IN THE CAD MODEL IS BASIC (THEORETICAL)

REFERENCE	N/A
PART MUST COMPLY WITH RESTRICTED SUBSTANCE MANAGEMENT STANDARD WSS-M99P9999-AT TO SAFEGUARD HEALTH, SAFETY AND THE ENVIRONMENT.	
DRAFTED IN ACCORDANCE WITH FORD MOTOR COMPANY ENGINEERING CAD AND DRAFTING STANDARDS VERSION 28.1	360 ANGLE PROJ. DIMENSIONS ARE IN MILLIMETERS
CAD TYPE K-CATIAS	CAD LOC. TC
CAD FILE HL-VRC46-0000SB-DC-DWG-01	SINGLE / 15 MASTER
OPER. NO. N/A	UNIT N/A
DRAWING HL-VRC46-0000SB-DCA	
DESIGN K.KARADAG	DETAIL K.KARADAG
TITLE 18XX_4X2_D/C_5500WB AIR_SUSP_LRT_AALMQ	SHT 1 OF 1
CHECKED V.YILANCI	SAFETY MFG USE
N/A	
SCALE 1:1	DATE 2003030
DIVISION N/A	PLANT

FORD MOTOR COMPANY

PRINTED COPIES ARE UNCONTROLLED