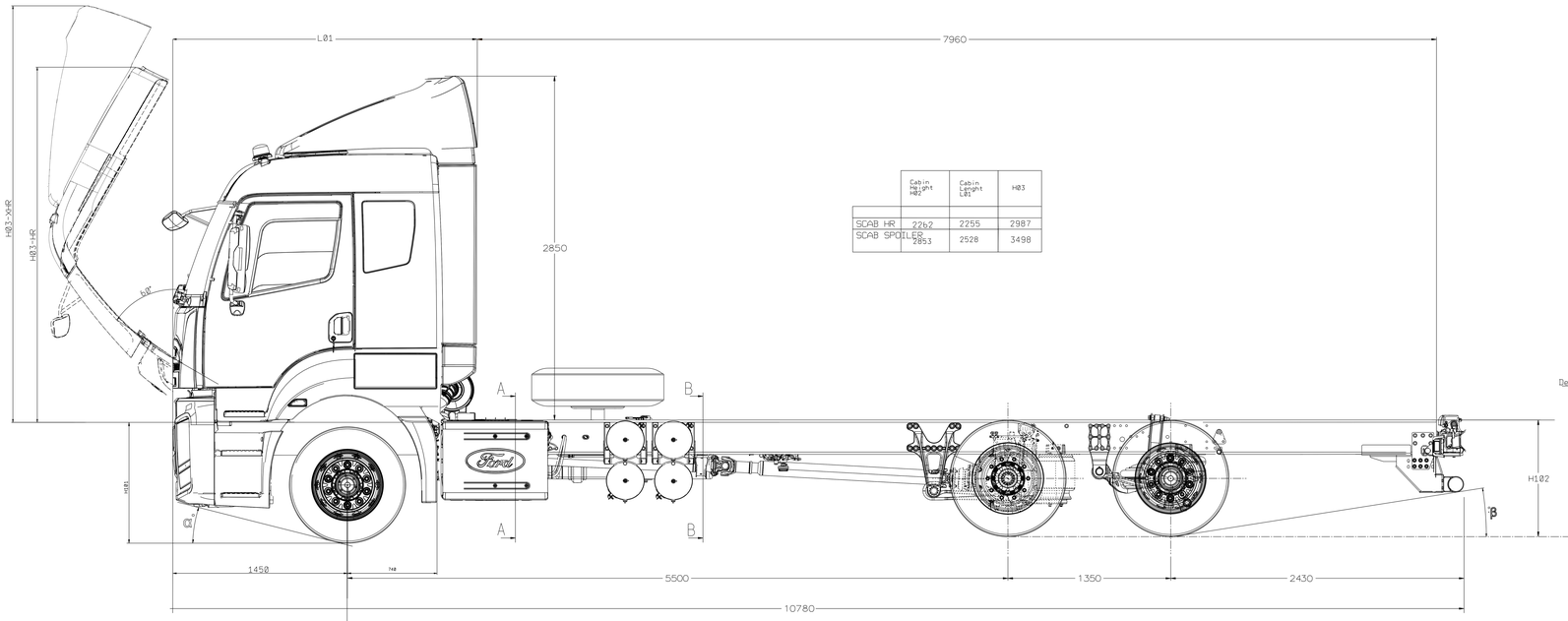

	Cabin Height H02	Cabin Lenght L01	H03
SCAB HR	2262	2255	2987
SCAB SPOILER	2853	2528	3498

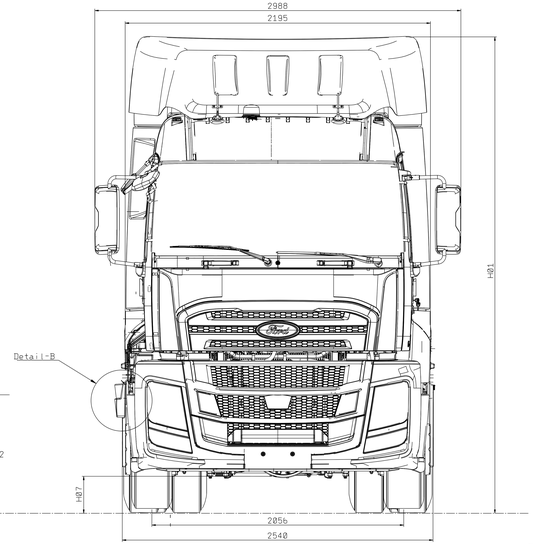

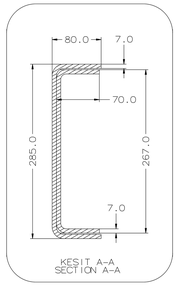

KESIT A-A
SECTION A-A

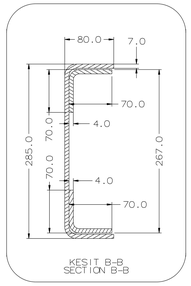

KESIT B-B
SECTION B-B

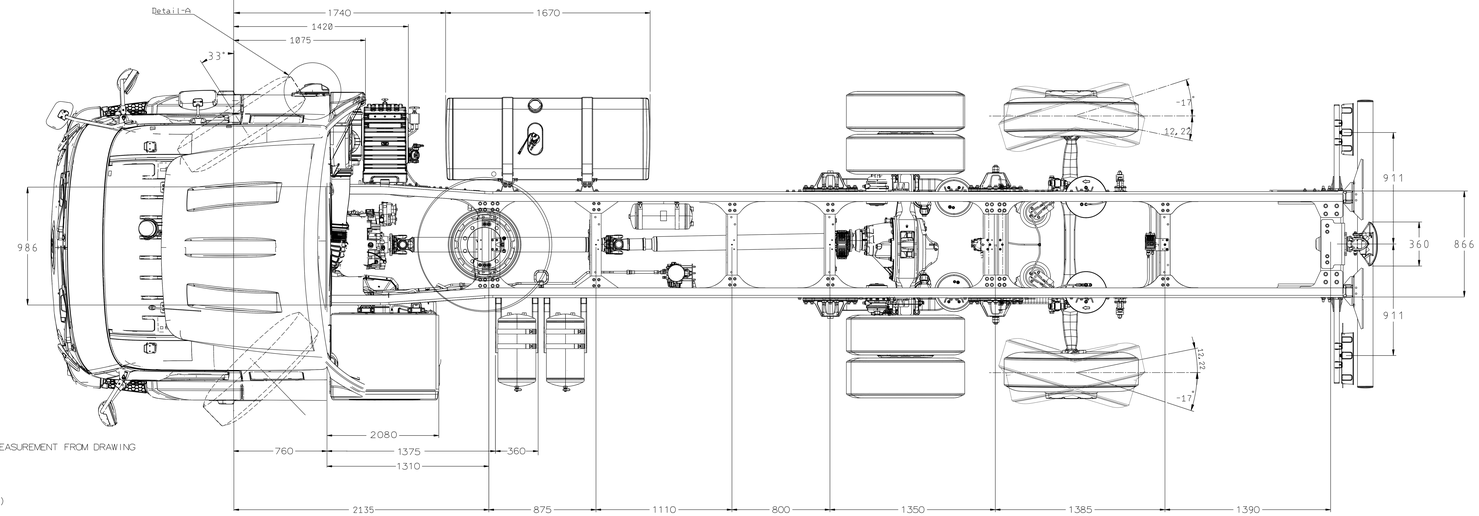

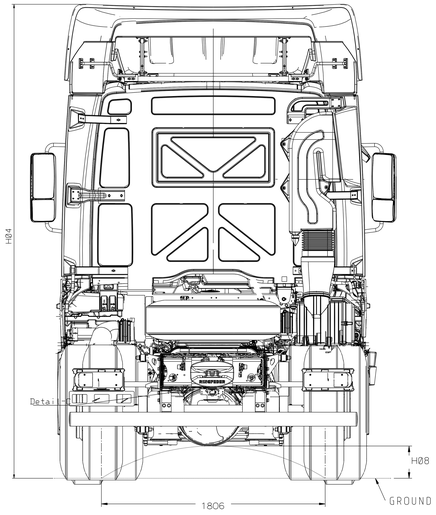

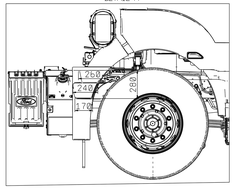

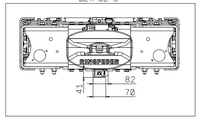

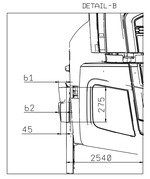

NOTE DO NOT TAKE A MEASUREMENT FROM DRAWING

FUEL TANK : 48OLT
ALL TOLERANCE ±50mm
(FOR UNLADEN VEHICLE)

NOT: RESIM UZERINDEN OLCU ALMAYINIZ.

YAKIT TANKI : 48OLT
TUM OLCULERDE TOLERANS ±50mm
(OLCULER YUKSUZ ARAC ICINDIR)

ALL MEASUREMENTS WERE GIVEN AS REFERANCE. ALL MEASUREMENTS SHOULD BE TAKEN FROM THE VEHICLE FOR ANY MODIFICATIONS AND/OR UPFIT CONSTRUCTION.

ARACA ILISKIN BIR ISLEM YAPILMASI GEREKEN DURUMLARDA ISLEM YAPILACAK ARAC UZERINDE FIILI OLCUM VE INCELEME YAPILMALI VE TESPIT EDILEN OLCU VE DIGER OZELLIKLERE GORE ISLEM YAPILMALIDIR.

Tire Size		Front Chassis Height (unladen)	Rear Chassis Height (unladen)	Front Ground Clearance-Axle (laden)	Rear Ground Clearance-Axle (laden)	Vehicle Overall Height (Unladen)	Approach Angle	Departure Angle
Front	Rear	H101	H102	H07	H08	H01	α	β
315/60 R 22,5	315/60 R 22,5	988	986	229	188	3266/3853	12,4	5,53
315/70 R 22,5	315/70 R 22,5	1019	1014	259	218	3297/3883	14	6,13
315/80 R 22,5	315/80 R 22,5	1050	1043	288	268	3328/3914	15,18	7

REVISIONS				
LTRS	ORIGINATOR	CHECKER	ENGR APP	MATL APP

PART AS RECEIVED AT THE FORD PLANT OR SERVICE PART PACKAGER/WAREHOUSE SHALL BE FREE OF ANY CORROSION ALLOWED WITH THE FORD CUSTOMER SERVICE DIVISION PROTECTIVE PACKAGING AND ANY CORROSION INHIBITORS OR FOREIGN MATERIALS DETRIMENTAL TO THE INSTALLATION OR FUNCTION OF THE PART MUST BE REMOVABLE BY THE INTENDED CLEANING METHOD

CHANGES TO DESIGN, COMPOSITION OR PROCESSING OF THE PART PREVIOUSLY APPROVED FOR PRODUCTION PURPOSES MUST BE APPROVED BY THE FORD COMPANY PRODUCT ENGINEERING. REFER TO ISGITS 16949

FOR CURRENT RELEASE STATUS, SEE THE WERS ENGINEERING NOTICE

FOR THE PURPOSES OF GEOMETRIC TOLERANCING, ALL DIMENSIONAL INFORMATION CONTAINED IN THE CAD MODEL IS BASIC (THEORETICAL)

REFERENCE	N/A
PART MUST COMPLY WITH RESTRICTED SUBSTANCE MANAGEMENT STANDARD WSS-M99P9999-A1 TO SAFEGUARD HEALTH, SAFETY AND THE ENVIRONMENT	
DRAFTED IN ACCORDANCE WITH FORD MOTOR COMPANY ENGINEERING CAD AND DRAFTING STANDARDS VERSION 23.1	3RD ANGLE PROJ - DIMENSIONS ARE IN MILLIMETERS
CAD TYPE: CATIA V5 / CAD LOC.: TC / CAD FILE: HL-VRC4b-000058-H2-DLG-01/1	UOM: SI MASTER
DPEP. NO.: N/A / UNIT: N/A / DRAWING: HL-VRC4b-000058-HJA	
DESIGN: FKARADAI / DETAIL: FKARADAI / TITLE: 2b45T_6x2_H/R_5500WB AIR_SUSP_RSA_E5	SHT 1 OF 1
CHECKED: VYILMAZ / SAFETY: MFG USE	N/A
SCALE: 1:10 / DATE: 2023/10/07 / DIVISION: N/A / PLANT:	

FORD MOTOR COMPANY

PRINTED COPIES ARE UNCONTROLLED